amateur radio

Vol. 40, No. 2
FEBRUARY, 1972
Registered at G.P.O., Melbourne, for transmission by post as a periodical Category "B"
Price 30 Cents

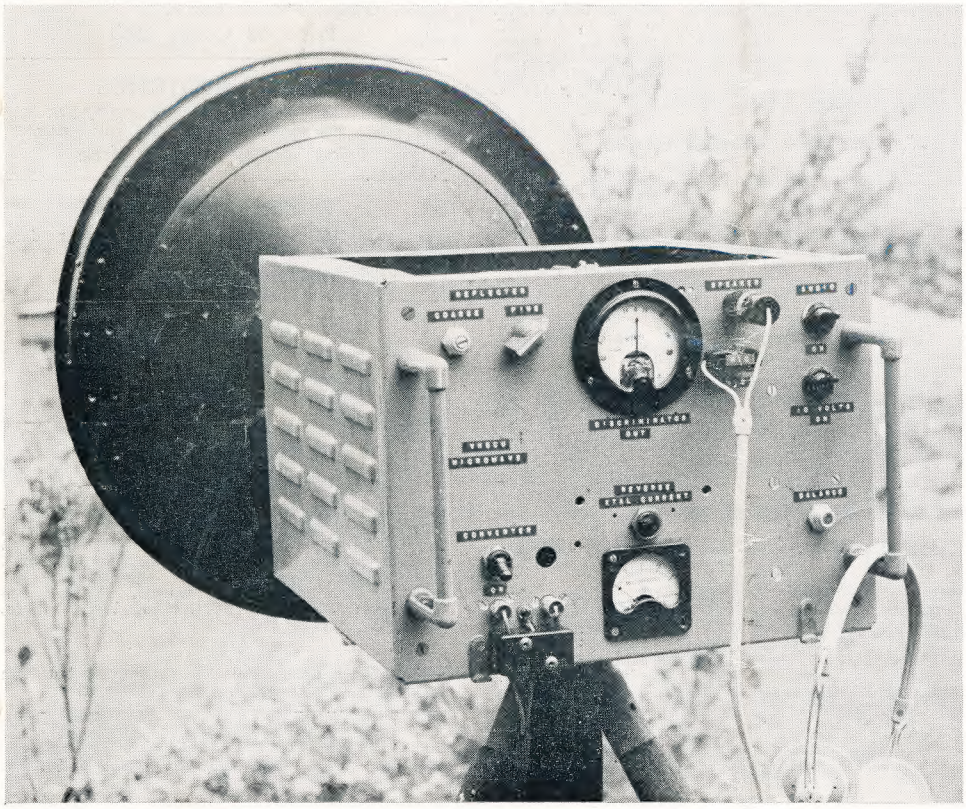

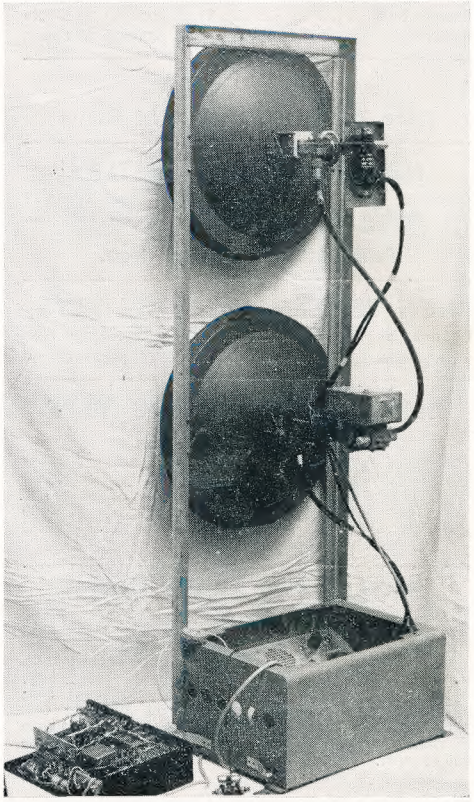

TRIO COMM. RECEIVER MODEL 9R-59DS

Four-band receiver covering 550 kHz. to 30 MHz. continuous, and electrical bandspread on 10, 15, 20, 40 and 80 metres. 8 valves plus 7 diode circuit. 4/8 ohm output and phone jack. SSB-CW, ANL, variable BFO, S meter, sep. bandspread dial, i.f. 455 kHz., audio output 1.5w., variable RF and AF gain controls, 115/250v. AC mains. Beautifully designed. Size: 7 x 15 x 10 inch. With instruction manual and service data.

Price $191.00 incl. sales tax

Speaker to suit, type SP5D, **$15.30** inc. tax

LT91 RECTIFIER

20 volt 2 amp.

Price $1.50, postage 10 Cents

PRINTED CIRCUIT TAB POTS

Values available: 500 ohm, 1K, 2K, 5K, 10K, 25K, 50K, 100K, 250K, 500K ohms, 1 and 2 megohms. Type "A"

Price 32 Cents each

RONETTE CARTRIDGES

Stereo type .... **$7.50** postage 20 Cents
Mono type .... **$4.50** postage 20 Cents

LOG BOOKS

Price 75 Cents, postage 20 Cents

NEW MR3P AMP. METERS

Complete with shunt block. Face size: 3¼ x 3 inch, m/hole 2¾ inch. Ranges in stock: 150, 125, 100, 75 and 60 amps.

Price $10.00, postage free.

NEW TELEGRAPH MORSE KEYS

Beginner's type .... $1.50 postage free
Heavy-duty type .... $9.00 postage free

AMERICAN RECORDING TAPE

(New, in sealed boxes)

1500 feet, 7-inch, Acetate, 1½ mil. $3.50
1200 feet, 7-inch, Acetate, 1½ mil. $2.50
1200 feet, 7-inch, Mylar, 1½ mil. $3.00
1200 feet, 5¾-inch, Acetate, 1 mil. $2.20
1200 feet, 5¾-inch, Mylar, 1 mil. $2.50

Postage 10c.

BROADCAST BAND TUNER

Locally made, Model 401 uses a shielded 3-stage I.F. Module with a single transistor mixer-osc. An AGC voltage is developed and applied to the 1st I.F. stage. High sensitivity is obtained with a ferrite rod, 8-in. long, 3/8-in. diam. Sensitvity: 150 uV.; bandwidth: 8 KHz.; supply voltage: 9V.; supply current: 5 mA.; audio output voltage: 0.5-1.0V.; load impedance: not less than 47K. Complete in plastic box with dial. Ready to plug in. **Price $25.00** nett.

MULTIMETERS

MODEL C-1000 POCKET MULTIMETER

1000 ohms per volt. AC volts: 0-10, 50, 250, 1000. DC volts: 0-10, 50, 250, 1000. DC current: 0-100 mA. Resistance: 0-150K ohms (3K centre). Two colour scale. Range selector switch. Dimensions: 3½ x 2¼ x 1 inch.

Price $6.75, postage 30c

MODEL 200H MULTIMETER

20,000 ohms per volt. DC volts: 0-5, 25, 50, 250, 500, 2500 (20,000 o.p.v.). AC volts: 0-15, 50, 100, 500, 1000 (10,000 o.p.v.). DC current: 50 uA., 2.5 mA., 250 mA. Resistance: 0-60K/6M ohm (scale centre 300, 30K ohm). Capacitance: 10 pF. to 0.001 uF./0.001 uF. to 0.1 uF. DB. scale: —20 dB. to plus 22 dB. Size: 4½ x 3¼ x 1⅛ inch.

Price $11.95, postage 30c

MODEL CT330 MULTIMETER

20,000 ohms per volt. DC volts: 0-6, 6, 30, 120, 600, 1.2K, 3K, 6K. AC volts: 0-6, 30, 120, 600, 1.2K (10K o.p.v.). DC current: 0-0.06 mA., 60 mA., 600 mA. Resistance: 0-6K, 600K, 6M, 600 megohms (30, 3K, 30K, 300K ohm centre scale). Capacitance: 50 pF. to 0.001 uF., 0.001 uF. to 0.2 uF. Decibels: —20 to plus 63 dB. Size approx. 4½ x 3⅝ x 1¾ in.

Price $18.75, postage 30c

MODEL OL-64D MULTIMETER

20,000 ohms per volt. DC volts: 0.025, 1, 10, 50, 250, 500, 1000 (at 20K o.p.v.), 5000 (at 10K o.p.v.). AC volts: 0-10, 50, 250, 1000 (at 8K o.p.v.). DC current: 50 uA., 1 mA., 50 mA., 500 mA., 10 amps. Resistance: 0-4K, 400K, 4M, 40 megohms. DB. scale —20 to plus 36 dB. Capacitance: 250 pF. to 0.02 uF. Inductance: 0-5000 H. Size: 5¾ x 4⅛ x 1¾ in.

Price $19.95, postage 30c

NEW MODEL US-100

Overload protection. Shockproof movement. Polarity switch. DC volts: 0-0.25, 1, 25, 10, 50, 250, 1000 (20K o.p.v.). AC volts: 0-2.5, 10, 50, 250, 1000 (5K o.p.v.). DC current: 1 mA., 25 mA., 500 mA. and 10 amp. AC current: 10 amp. Resistance: 0-50 Megohm (centre scale 50), R x 1, 10, 100, 1K, 10K. DB. scale: —20 to plus 10, plus 22, plus 35, plus 50 dB.

Price $34.50, postage 40c

MODEL AS100/DP HIGH SENSITIVITY MIRROR SCALE

100,000 ohms per volt DC. Mirror scale, protected movement. DC volts: 3, 12, 60, 120, 300, 600, 1200 (100K o.p.v.). AC volts: 6, 20, 120, 300, 600, 1200 (10K o.p.v.). DC current: 12 uA., 6 mA., 60 mA., 300 mA., 12 amps. Resistance: 2K, 200K, 20M, 200 megohm. Decibels: —20 to plus 63 dB. Audio output: 6, 30, 120, 300, 600, 1200 volts a.c. Size: 7½ x 5½ x 2¾ inch.

Price $34.50, postage 75c

MODEL A10/P GIANT (6½ inch) METER, CIRCUIT TESTER

30,000 ohms per volt DC with in-built signal injector, overload protected. DC volts: 0.5, 2.5, 10, 50, 250, 500, 1000 (at 30K o.p.v.), 5000 (at 10K o.p.v.). AC volts: 2.5, 10, 50, 250, 500, 1000 (at 10K o.p.v.). DC current: 50 uA., 1 mA., 50 mA., 500 mA., 1 amp., 10 amp. AC current: 1 amp., 10 amp. Resistance: 10K, 100K, 1M, 100 megohm. Signal injector: Blocking oscillator circuit with a 2SA102 Trans. Decibels: —20 to plus 63 dB. Size: 6½ x 7¼ x 3¾ inch.

Price $55 tax paid, postage 75c

"REALISTIC" DX150 SOLID STATE COMM. RECEIVER

Four bands covering 535 kHz. to 30 MHz., fully transistorised, SW/CW/SSB/AM boardcast. 240v. a.c. or 12v. d.c. operation. Product detector for SSB/CW plus fast and slow a.v.c.; variable pitch b.f.o.; illuminated electrical bandspread, fully calibrated for Amateur bands, cascode r.f. stage; a.n.l. for r.f. and a.f.; zener stabilised; o.t.l. audio; illuminated S meter; built-in monitor speaker.

Price $234.20 incl. tax

Matching speaker to suit, **$13.60**

STEREO ARMS

New, complete with Ceramic Cartridge with balance weight.

Price $5.75, postage 30 Cents

MONO ARMS

Complete with Cartridge.

Price $3.00, postage 30 Cents

NEW BEZEL LAMP HOLDERS

Complete with 6-volt globes. Colours: Red, Green, White, Orange, Blue or Lemon.

Price 58 Cents each

TOGGLE SWITCHES

New DPDT Toggle Switches—C/OFF/L/R
10 amp. 125 volt or 5 amp. 240 volt ratings.

Price $2.20, postage free

MASTER METERS

New, type No. 24F/499) 1-0-1 mA. centre reading. 4-inch square blank scale

Price $4.00, postage 30 Cents

RESISTORS

Poly Pack of 100 Resistors. 33 values of ½ and 1 watt rating.

Price $2.00, post paid

LAFAYETTE SOLID STATE HA600 COMM. RECEIVER

Five bands, a.m., c.w., s.s.b., Amateur and Short Wave, 150 to 400 KHz. and 550 KHz. to 30 MHz. FET front end. Two mechanical filters. Huge dial. Product detector. Crystal calibrator. Variable BFO. Noise limiter. S meter. 24 in. bandspread. 230v. a.c./12v. d.c., neg. earth operation. RF gain control. Size: 15 x 9¾ x 8¼ inches. Weight 18 lb. S.A.E. for full details.

Price $199.50 net.

LAFAYETTE HA800, solid state, as above but **Ham Band only**. SSB-AM-CW. **Price $195** net.

POCKET CRYSTAL RADIO

Type ER22. Set complete. **Price $1.50.**

HAM RADIO SUPPLIERS

323 ELIZABETH STREET, MELBOURNE, VIC., 3000

Phones: 67-7329, 67-4286 All Mail to be addressed to above address

Our Disposals Store at 104 HIGHETT ST., RICHMOND (Phone 42-8136) is open Mondays to Fridays, 10.30 a.m. to 5.0 p.m., and on Saturdays to midday.

We sell and recommend Leader Test Equipment, Pioneer Stereo Equipment and Speakers, Hitachi Radio Valves and Transistor Radios, Kew Brand Meters, A. & R. Transformers and Transistor Power Supplies, Ducon Condensers, Welwyn Resistors, etc.

amateur radio

JOURNAL OF THE WIRELESS INSTITUTE OF AUSTRALIA. FOUNDED 1910

FEBRUARY, 1972
Vol. 40, No. 2

Publishers:
VICTORIAN DIVISION W.I.A.,
Reg. Office: 478 Victoria Pde., East Melbourne, Vic., 3002.

Publications Committee:
R. Dorin VK3ZU
Ken Gillespie VK3GK
Harold Hepburn (Secretary) VK3AFQ
Peter Ramsay VK3ZWN
W. E. J. Roper VK3ARZ

Circulation—
Jack Kelly VK3AFD

Draughtsmen—
Neil Osborne VK3YEI
John Whitehead VK3YAC

Manager:
Peter B. Dodd VK3CIF

Enquiries and material to:
The Manager, Phone (03) 41-3535.
478 Victoria Pde., East Melbourne, Vic., 3002.
P.O. Box 67, East Melbourne, Vic., 3002.
Copy for "A.R." should be received by the **third of each month.**

Advertising Representatives:
TECHNICAL NEWS PUBLICATIONS
67 Victoria Parade, Collingwood, Vic., 3066.
Telephone 41-4962.
P.O. Box 191, East Melbourne, Vic., 3002.

Advertisement material should be sent direct to the printers by the **first of each month.**

Hamads should be addressed to the Manager by the **third of each month.**

Printers:
"RICHMOND CHRONICLE," Phone 42-2419.
Shakespeare Street, Richmond, Vic., 3121.

★

ACKNOWLEDGMENTS: If you write to Federal Executive or to the Manager no acknowledgment is sent out unless you specially request one. Better still, for important items, send them certified mail.

★

Members of the W.I.A. should refer all enquiries regarding delivery of "A.R." direct to their Divisional Secretary and not to "A.R." direct. Two months' notice is required before a change of mailing address can be effected. Readers should note that any change in the address of their transmitting station must, by P.M.G. regulation, be notified to the P.M.G. in the State of residence; in addition, "A.R." should also be notified. A convenient form is provided in the "Call Book".

CONTENTS

Page

Technical Articles—

A Drop of Home-Brew 5
A Tracking FM-AM Demodulator using an IC 3
ON F.M. Repeaters 7

General—

Amsat 1971 Annual Report 10
Around the Trade 11
Book Review 16
Contest Calendar 12
Cook Bi-Centenary Award 7
Correspondence 9
Divisional Notes 15
DX 12
Federal Comment: Changes in Federal Structure 2
Federal Repeater Secretariat 8
New Call Signs 14
New Five-Minute Adhesive 7
Overseas Magazine Index 11
Prediction Charts for February 1972 8
Reciprocal Licensing—Belgium 15
Silent Keys 16
Small Mechanical Drives 11
VHF 13
VHF Propagation 16
6 Metre Amateur Band 16
14th Jamboree on the Air 16

COVER STORY

Equipment used for 10 GHz. Australian record. At left, VK5ZMW's 10.01 GHz. Station; at right, VK5CU/P's Tx and Rx Parabolas for 10.04 GHz. See details in VHF Notes on page 13.

FEDERAL COMMENT:

CHANGES IN FEDERAL STRUCTURE

On 17th January, 1972, the Wireless Institute of Australia was incorporated as a Company limited by guarantee.

It is now nearly ten years since the changes proposed in the Federal structure that have lead to the incorporation of the Federal body were first advanced to the Federal Council by the Victorian Division. In fact the need for change has resulted in change taking place before the structural changes could be implemented. For example, when the Victorian Division put forward its original proposals it foresaw that at some time in the future the Federal body could wish, one day, to employ a Secretary or Manager. The structure proposed was designed to allow this to occur. In fact a Manager has now been employed for nearly a year, though interim arrangements have had to be made with the Victorian Division pending finalisation of the incorporation of the Federal body.

We can, as an organisation take, I think, no pride in the fact that we took so long to take these steps that now seem to be so obvious.

In effect, the Federal body now has a completely new constitution in the form of its Articles of Association. It is, I think, appropriate to point to some of the changes that have been made and the consequences that flow from them. These points may be summarised as follows:

1. WHY A COMPANY?

The Wireless Institute of Australia is incorporated in Victoria as a Company limited by guarantee and it holds a certificate of the Attorney-General enabling it to dispense with the word "limited" in its title and by virtue of that certificate certain requirements of the Companies Act in relation to the lodgment of documents are not applicable to it. The Company has six "members", namely each of the Divisions. A company is a separate legal entity from the individuals that comprise it. This enables it to enter into contracts and undertake liabilities which ordinarily raise no question of the personal liability of either its members or officers.

2. "AMATEUR RADIO"

This issue of "Amateur Radio" will be the last issue published by the Victorian Division. One of the important changes proposed by the Victorian Division when it advanced its original proposals was that this magazine and the other publications of the Institute should be published by all Divisions. We are a large national body. This magazine is sent to all members of all Divisions. It is only reasonable that all Divisions should have an equal say in its content and production. Therefore, the Federal Council appoints an Editor and a Publications Committee. The Editor is a member of the Federal Executive and is Chairman of the Publications Committee. He is, therefore, in a position to see the day to day problems dealt with by the Federal Executive. He is in a position to consult with the Federal Executive as and when it becomes necessary. He will, of course, have the assistance of the Manager who will undertake a large part of the work associated with the magazine.

3. THE FEDERAL COUNCIL

Each Division will continue to be represented by a Federal Councillor. The Institute meeting in general meeting is called the Federal Council. The Articles envisage the appointment of an alternate Councillor to represent a Division at any particular or special meeting of the Federal Council. The annual general meeting, incidentally, is called the Federal Convention. As you can see, most of the fundamental concepts of our Federal body are preserved in the new form. One important difference is that the Federal Councillors are required to have the written authority of their Divisions to vote on behalf of their Division and upon their vote being cast their Division is thereupon bound by it.

In the past the decisions have been subject to ratification by the Divisions —generally speaking decisions of the Federal Council made at Easter at the Federal Convention have not been ratified by all the Divisions until August or even September. However, the new Articles do provide that a Federal Councillor may withhold his vote and exercise it within 30 days of the end of the Convention if he so wishes. This provision is designed to deal with any matter in respect of which the Federal Councillor feels that it is essential that he obtains guidance from his Division. If he does not exercise his vote within 30 days he is deemed to abstain.

4. THE FEDERAL EXECUTIVE

The Federal Executive are appointed at each Federal Convention. Under the old constitution the Federal Executive are nominated by one Division which is nominated as Headquarters Division and the nomination of the individuals is subject to ratification by the Divisions. This is all done prior to the Convention by mail.

The new Articles provide that the members of the Executive are appointed by the Federal Council at the Federal Convention. The new "constitution" has no concept of a Headquarters Division. The only qualification to be a member of the Federal Executive is that the individual is a member of a Division. As a matter of practical reality the Federal Council will, no doubt, at least in the foreseeable future, continue to appoint the members of the Federal Executive from one Division as the costs of bringing a member of the Federal Executive to regular meetings from other States would be certainly more than we can afford at this time. Indeed, the new Articles go so far as to permit the Federal Council to appoint one of their members as President.

5. THE FEDERAL SECRETARY

I have already indicated how the Federal Executive are appointed and have also referred to the fact that the Editor of "Amateur Radio" is a member of the Federal Executive. Including the President and the Editor of "Amateur Radio" there are six members of the Federal Executive. In addition, the Articles provide that a Secretary shall be appointed by the Executive. The Secretary has no vote as a member of the Executive because it was envisaged (as will in fact be the case) that the Secretary will be a paid employee. The Attorney-General, in granting his certificate, requires that no paid employee can be appointed as a Director (in formal terms the members of the Federal Executive are the Directors of the new Company).

6. PROCEDURE

Generally speaking the procedural steps that will be utilised within the new framework parallel the procedural steps in the old structure. One important difference is that notice of motions must be given 30 days prior to a Federal Convention. A motion can still be passed at a Federal Convention even if notice has not been given. The Chairman has a discretion to permit such business to be brought forward but if he exercises his discretion to allow the matter to be considered, it requires three-quarters majority to be passed.

These, then, are some of the more important changes that take place with incorporation of the Wireless Institute of Australia. Many of the changes that have been incorporated in the Federal structure are designed primarily to facilitate the handling of its day to day affairs. The new structure does, however, permit the transfer of the publications to the Federal body so that they do become truly national. The structure will also facilitate many of the administrative changes that have already been implimented, such as the centralisation of subscription records and the E.D.P. processing of those records.

Ordinarily I am hesitant to pay tribute to the Victorian Division because I am mindful that, as a member of that Division, such comments could be misconstrued. However, on this occasion, I believe that I would have the support of all the Federal Councillors if I were to point out that these changes, which can only strengthen the Federal body, are due in no small measure to the foresight and truly national outlook of the members and the Council of the Victorian Division. We now have a far more effective structure thanks to that foresight. It is up to us to use that structure effectively.

—Michael J. Owen, VK3KI,
Federal President, W.I.A.

A Tracking FM-AM Demodulator using an IC

R. F. DANNECKER, VK4ZFD*

This is the second of two articles on the use of the phase-lock loop as an FM/AM demodulator.

The circuit to be described uses the Signetics Corp. NE561B IC and is based on Signetics' application notes. Besides providing demodulation of the f.m. component of a signal and perfect a.f.c. tracking of that signal, provision is also made for the synchronous demodulation of the a.m. component of the signal.

A block diagram of the NE561B is shown in Fig. 1; the portion enclosed in the dotted outline is in addition to the basic phase-lock loop already described. The a.m. input is taken before any limiter in the main receiver and its phase is shifted 90° with respect to the f.m./r.f. input. This is necessary to have the correct phase relationship between the a.m. signal and the v.c.o. input to the multiplier.

Shown in Fig. 2 is the basic demodulator. With reference to Fig. 1 we have the limited f.m./r.f. input applied between pins 12 and 13, phase shifted a.m. input applied at pin 4, the v.c.o. frequency determining capacitor (Co) connected between pins 2 and 3, the external components of the low pass filter between pins 14 and 15, and the f.m. de-emphasis capacitor (Cd) connected between pin 10 and earth. The muting function is accomplished by use of the output of the a.m. detector to open an audio gate in the presence of signal input.

The circuit diagram for the complete demodulator is shown in Fig. 3. Circuit functions can be most readily seen with reference to Fig. 2. The design centre frequency is 2 MHz., but the NE561B will function from less than 1 Hz. to more than 15 MHz. Input signal is amplified by the 2N5486 JFET which is wired as a simple tuned amplifier at the required i.f. Three AY1101 transistors are used in the limiter, while the 90° phase shift is provided by an adjustable RC phase shift network.

Muting of the f.m. output is performed by the use of a suitably biased diode as a series gate. When no signal is present, the diode is reverse biased by the 2 x 2N3638 emitter coupled pair and when signal is applied the output from the synchronous a.m. detector causes the emitter coupled pair to forward bias the diode and allow signal through to the f.m. output.

The AY1101 transistor is used to set bias levels relative to those of the IC. A.m. output is taken from pin 1 via a JFET source follower; an MPF102 would be suitable for this function. The a.m. detector can also be used to give an indication of signal strength. A suitable circuit is shown in Fig. 4.

(Continued on next page)

* 52 Pohlman Street, Southport, Qld., 4215.

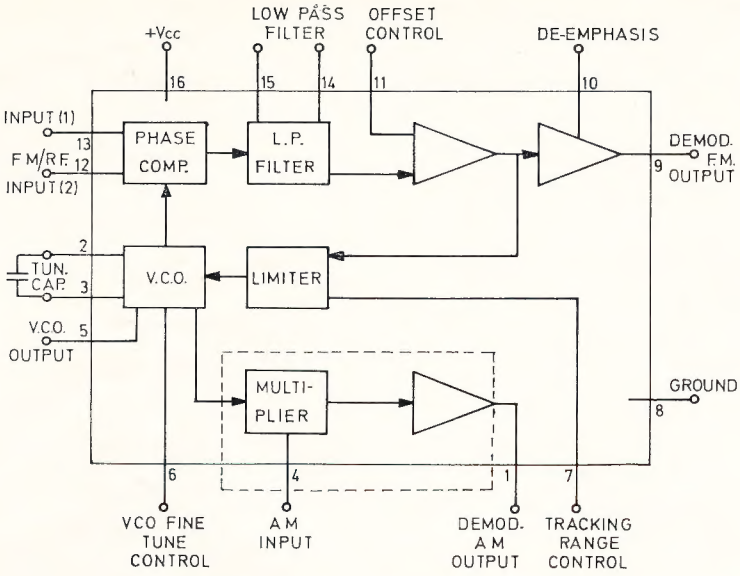

BLOCK DIAGRAM OF NE561B – FIG. 1.

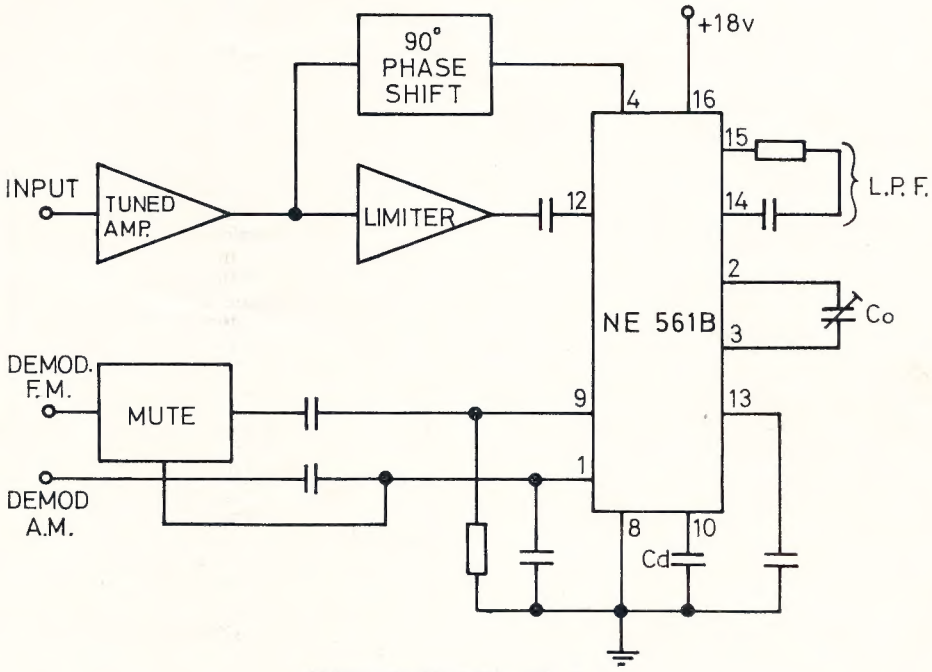

BASIC DEMODULATOR.—FIG. 2.

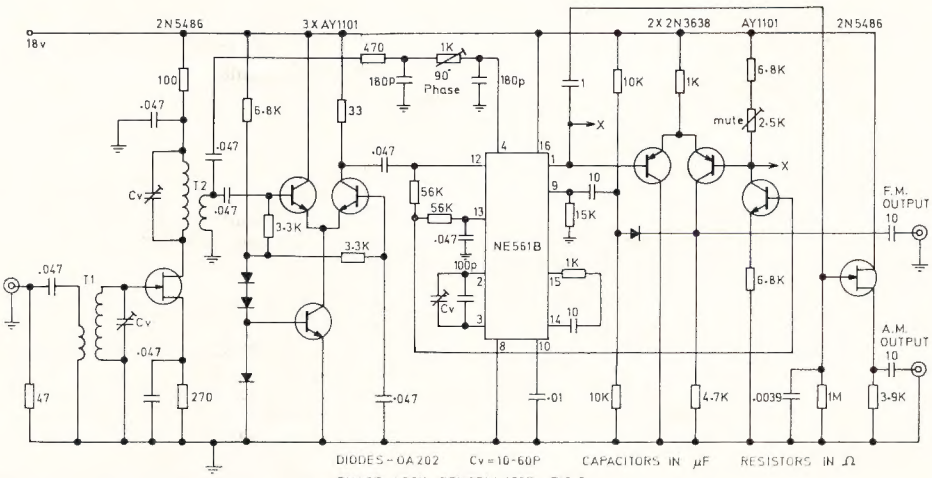

PHASE-LOCK DEMODULATOR – FIG. 3

If operation at some i.f. other than 2 MHz. is desired, (e.g. 455 KHz.) it would be necessary to change the resonant circuit in the JFET amplifier, change the v.c.o. timing capacitor Co (e.g. 600-800 pF.) and the 90° phase shift network (e.g. 2.2K, 5K pot., 2 x 150 pF.). If a frequency less than 500 KHz. is required, consideration could be given to the NE565 which will function as an f.m./p.m. detector but does not provide for a.m. detection and consequently muting.

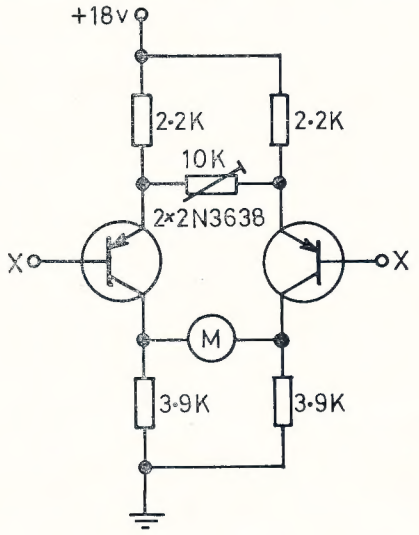

SIGNAL LEVEL INDICATOR
FIG. 4.

An alternate method of fine tuning the v.c.o. is shown in Fig. 5 in which current is injected into pin 6 of the IC. A change of +12% is possible for an input current of 1 mA. This method of fine tuning will also affect the tracking range of the demodulator.

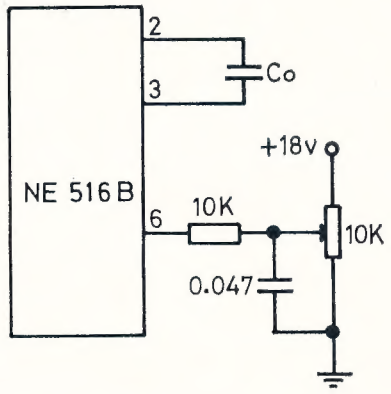

ALTERNATIVE VCO FINE TUNING — FIG. 5.

This completes the description of the phase-lock demodulator.

Such a unit as has been described in this article is in use in a satellite tracking receiver used for monitoring navigational and weather satellites. The principal use of the phase-lock type of detector for this application is the automatic tracking of the Doppler shift of the signal which is as much as ±4 KHz. at the frequencies used.

(Continued on Page 7)

Hy-Q Electronics manufacture a full range of Crystal Filters and Discriminators.

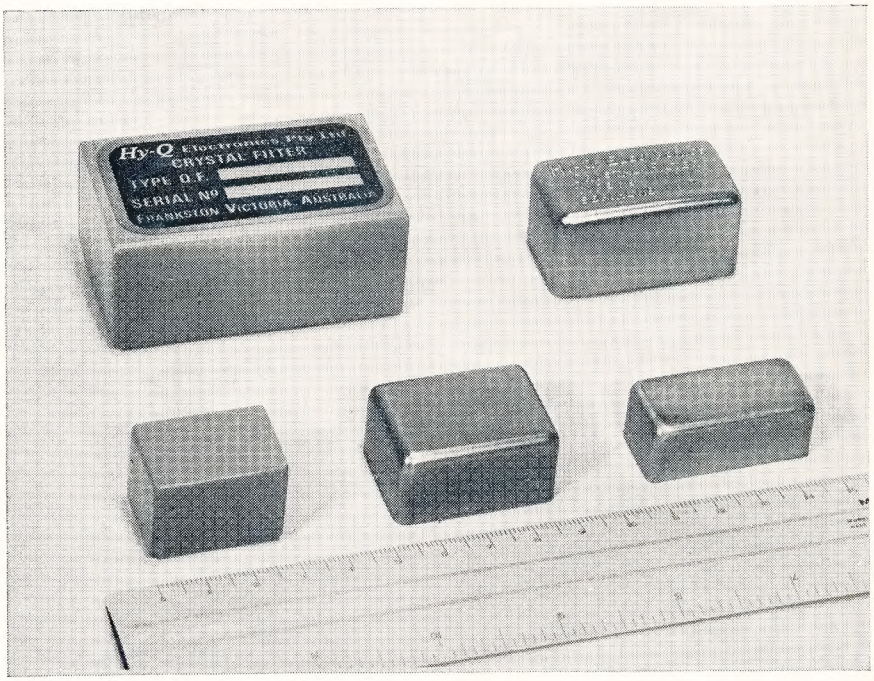

Available in a variety of mechanical configurations within the range 1650 kHz. to 21.4 MHz. with electrical characteristics to suit all normal requirements of the telecommunications industry.

Phone, write or Telex us for specifications and prices.

Hy-Q Electronics Pty. Ltd.

1-10-12 Rosella Street, Frankston (P.O. Box 256), Victoria, 3199, Australia. Telex: 31630.
Telephone: 783-9611.

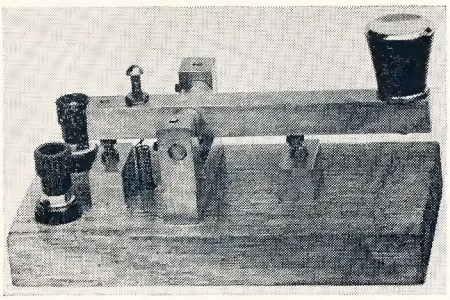

A DROP OF HOME-BREW

C. A. CULLINAN, VK3AXU*

The plea by VK3UG in his letter to the Editor in the August 1970 issue of "Amateur Radio" (p. 21) regarding the shortage of Morse Code Keys prompted the writer to consider the possibility of making a Morse Key entirely with hand tools, the basic philosophy being that anyone within "A.R's" wide flung circulation area should be able to "home-brew" it with no more than an elementary skill in the use of tools.

A secondary consideration was that for a beginning Amateur as many of the tools as possible would be of use in other projects.

One of the great difficulties facing Radio Amateurs, as well as many other hobbyists, is the problem of finding sources of supply of parts. In the U.S.A. "QST" has devoted quite a lot of material to this problem and lately has been giving sources of supply with some constructional articles.

As far as this key was concerned no difficulty was experienced in obtaining the tools and most of the parts locally. (Hardware store, timber yard and automotive supply houses.) The other items were obtained readily from Radio Parts Pty. Ltd. Most of the tools can be obtained from Radio Parts too.

LIST OF TOOLS

1—snail counter-sink bit.
1—vyce, 2½" jaws.
1—hand-drill.
1—1/16" H.S. drill.
1—1/8" „ „
1—3/16" „ „
1—1/4" „ „
1—17/64" „ „
1—5/32" Whit. taper tap.
1—5/32" „ plug „
1—taper tap 3.5 mm. 0.6 mm. pitch
1—plug tap 3.5 mm. 0.6 mm. pitch
1—No. 33 drill H.S. (not No. 32)
} These are manufactured in Australia by P. & N.
1—pocket knife

These metric taps and the No. 33 drill may not be available "over the counter" but a local hardware store got them quite easily for this project. They are used in the automotive electrical industry in drilling and threading holes for certain ignition points.

1—tap wrench or tap holder. (Be certain that it will hold the metric taps as they are rather small.)
1—hacksaw (preferably with at least one blade for brass and one blade for steel).
1—flat file, 12" long x 1¼" wide, mill bastard.
1—screw-driver, ¼" blade.
1—combination try and mitre square, with scriber.
1—hammer.
1—centre punch.

Note: The No. 33 drill is the correct size for the 3.5 mm. tap in brass. Its diameter is 0.1130" whereas the No. 32 drill is 0.1160".

The No. 33 drill and the metric taps may be useful later on when Australia goes completely metric.

LIST OF COMPONENTS

1—piece brass, 18" long x ½" square.
1—piece silver steel rod, 6" long x ¼" diameter.
1—piece brass tubing, 2½" long x ¼" bore with minimum wall thickness of 1/16"

or

1—piece brass rod, 2½" long x ½" diam.

Any good hardware store should be able to obtain this material although it may have to get larger quantities as some wholesalers will not cut off small quantities.

1—Turner 727 cupboard door knob or similar.

(The brass, steel and knob were purchased for $2.53 from the local hardware store.)

4—Lorimer ignition points, S20 (made in Australia)

or

4—Lucas magneto contact sets, 484098 (made in Great Britain)

or

4—Schier Kontakte 2008 for Auto-lite IGP3028A or IGP3028LS (made in Germany).

Only the screwed contact of these sets is used—all have a 3.5 x 0.6 mm. thread.

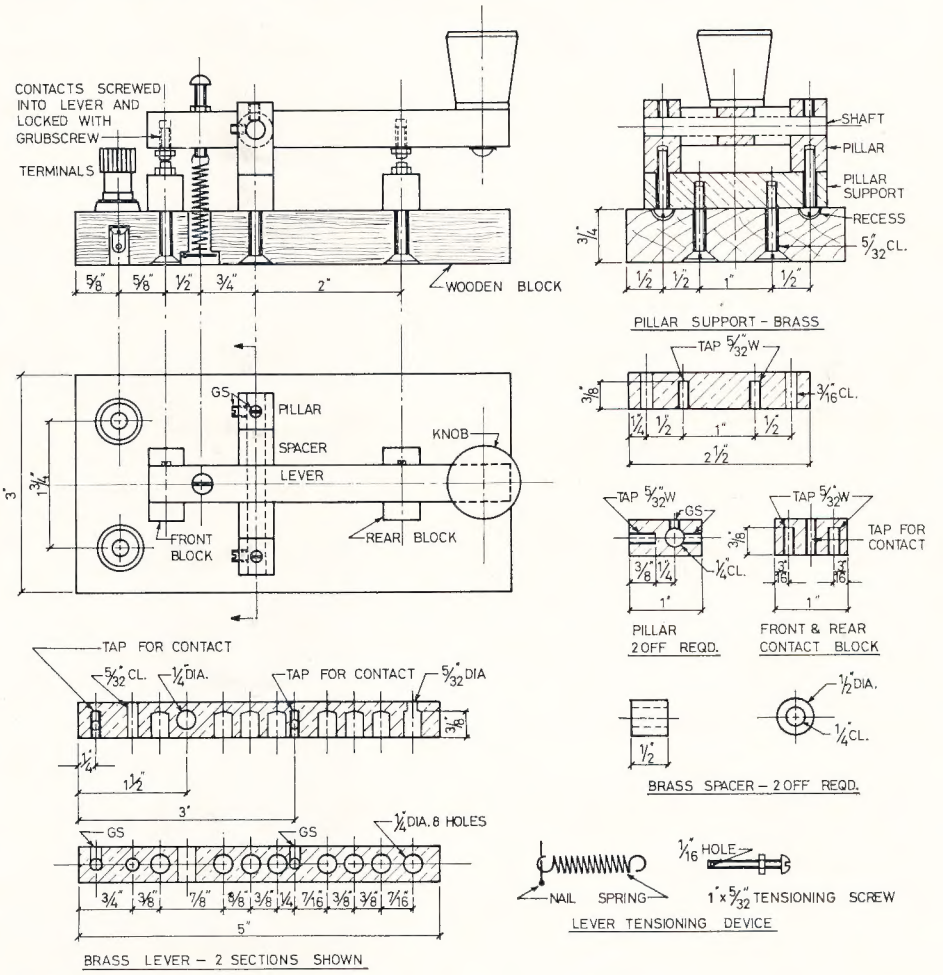

NOTES:—
W — BRITISH STANDARD WHITWORTH THREAD, GS-5/32" GRUB SCREW
CL — CLEARANCE HOLE
ALL FIXING SCREWS — 5/32" BRASS METAL THREADS
SCREWED CONTACTS — IGNITION COIL CONTACT — THREAD 3.5mm. DIA. 0.6mm. PITCH
SHAFT — 1/4" DIA. x 2 1/2" LONG MILD STEEL
1/2" x 1/2" SECTION BRASS USED THROUGH OUT UNLESS OTHERWISE NOTED

N.O.

* 6 Adrian Street, Colac, Vic., 3250.

1—Gee-Jay spring ES35, 1" x 7/32" close wound tension spring.

No trouble was experienced in obtaining these from a local auto-electrical repair firm. The finished key used a mixture of all three of the above contacts just to determine the availability of these contact sets.

It is possible, also, to use the screwed contact made for A Model Fords, but these have a different thread so would require a different drill and taps to those in the parts list.

The local Ford dealer could have supplied some A Model Ford contacts from stock. Also for American readers, Sears Roebuck's catalogue quotes them as part number 28H8290.

6—5/32" hollow pointed grub-screws.

2—terminals.

4—solder lugs.

2—5/32" lock washers.

1—5/32" hex. brass nut.

4—1" long x 5/32" round-head Whit. brass screws.

This material can be purchased from Radio Parts Pty. Ltd., although it may be necessary to purchase in gross lots, however the unused material will be useful in later projects.

1—piece hardwood 6" x 3" x ¾" nominal.

To be cut square. Top and bottom to be finished flat. Finished size may be slightly smaller than the above due to machining. This was obtained without any difficulty from a local timber yard.

1—piece tinned copper wire, about 1 ft. x 22 s.w.g.

1—1" nail.

CONSTRUCTIONAL DETAILS

The drawings give details and the following notes are for guidance.

The spring is cut in half and a loop formed at the cut end of one piece. One end of the spring goes through a 1/16" hole drilled cross-wise through the 1" x 5/32" tension screw. The other end of the spring goes through a 17/64" hole bored through the wooden base and is held in place with a cut-off nail which lies in a groove scored in the base with a pocket knife.

Remove the filigree from the knob by breaking it away.

The shaft hole in the lever and shaft holes in the spacers are ¼" diameter, but the shaft holes in the pillars are 17/64". The silver steel shaft should be ¼" diameter and may have to be forced into the lever and spacers if they have been accurately drilled to ¼".

The 17/64" holes in the pillars are a bit big but a drill in between 17/64" and ¼" was not available and it was not desired to go to the expense of reamers or scrapers. This is the reason for the two locating grub-screws in each pillar. The threads for these should be cut with the taper tap so that the grub-screws will be tight.

The different makes of ignition contacts may vary in length of thread and may have to be cut off, particularly the rear one for the lever.

A number of ¼" holes are counterbored on the underneath side of the lever to reduce its mass, otherwise considerable exertion is needed when sending, to raise the lever, because of gravity, for spaces. If the tension spring is too tight then too much work is needed in sending.

Even as it is, the key is a bit "heavy," but has been operated at 30 w.p.m.

It can be made "lighter" if the lever is made from a piece of brass 5/16" wide x 7/16" deep and altering the length of the spacers. The rest of the brass work remains the same.

It is essential that the shaft holes all be drilled accurately or the shaft will bind in the pillars. This drilling may take some practice and is the reason that a piece of brass 18" long was purchased. Also, the ends of the spacers and the pillars must be filed flat.

If a drill press and lathe are available then it will be easier to make the key, however the one shown was made using hand tools only.

The cost can be reduced by using iron or brass screws for the two front contacts, in which case the key will probably have a "soft" feel.

The cost of this project, apart from tools, was $10, most of it being for the contacts as it was necessary to buy a "pair in a set" and discard the rivetted contact as no way could be worked out to use it.

So here is a key that won't blow up like some other "home-brew".

WIRELESS INSTITUTE OF AUST.
VICTORIAN DIVISION

A.O.C.P. CLASSES

Classes in theory and Morse will commence respectively on Tuesday, 15th February, 1972, and Thursday, 17th February, 1972, from 8 p.m. to 10 p.m. Subject to demand, a Saturday morning class in theory is also proposed.

Persons desirous of being enrolled should communicate with the Secretary, W.I.A., Vic. Division, P.O. Box 36, East Melbourne, Vic., 3002. Phone 41-3535 10 a.m. to 3 p.m.

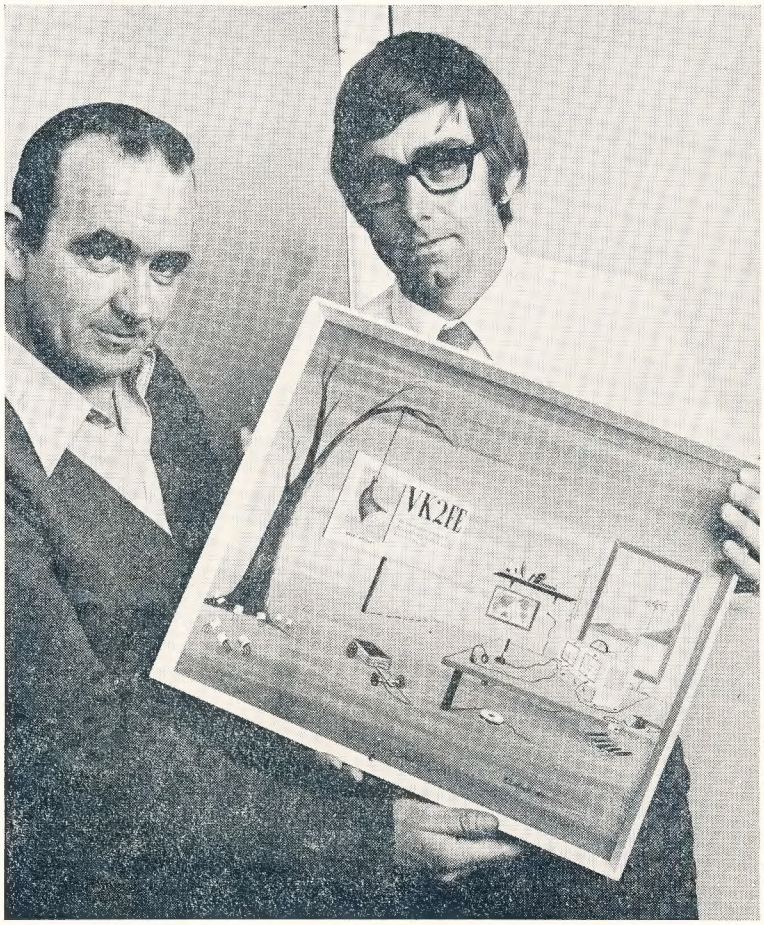

Barry VK2FE recently had the pleasure of receiving a painting, especially painted for him by talented Wollongong artist Kevin Pomfrett. The painting, a semi-abstract work, has Amateur Radio as the theme with personal touches of Barry's station throughout. Of signifigance is the "shadow" of the signpost. This would be something of a rareity in Amateur Radio to have a personalised painting with one's own station as the theme.

ON F.M. REPEATERS

The two basic forms of f.m. repeaters in use today are shown in block diagram form in Figs. 1 and 2.

The system in Fig. 1 has the disadvantage that the signal must be demodulated with consequent distortion and receiver threshold problems. However, it does have the advantage that the audio can be processed (filtered and compressed) before re-transmission.

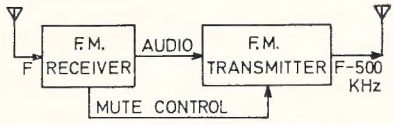

DEMODULATE–REMODULATE REPEATER
FIG. 1

The system in Fig. 2 reduces distortion and threshold problems, but no simple way of signal processing is available before re-transmission. Thus the incoming signal must be degraded by the repeater before being re-radiated.

A somewhat superior version of the heterodyne repeater is shown in Fig. 3. Though it is not an original idea, the writer advocates it because it offers significant improvement over the systems used at present in Amateur repeaters/translators.

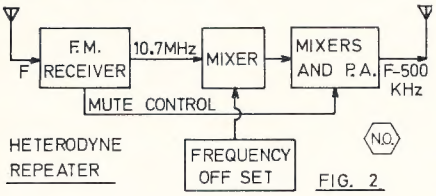

HETERODYNE REPEATER
FIG. 2

Due to the action of the phase-lock loop (refer to articles in "A.R.," Jan., 1972, and this issue) we know that $F_I = F_O - F_R$, therefore $F_O = F_I + F_R$ and we obtain the offset in frequency. As outlined in a previous article on phase-lock loops, the output (F_O) of the loop is a cleaned up version of the input since the loop is effective a filter which rejects noise. Thus the incoming f.m. signal is not only translated in frequency, but the undesired noise on it is greatly reduced before it is re-transmitted.

The only additional components required above those in a heterodyne repeater are the phase-lock loop (one integrated circuit) and the band-pass filter (tuned circuit). This is not a very large price to pay for the substantial improvement gained.

Improved mute control can also be achieved by using a phase-lock loop IC containing a coherent amplitude detector which is used to operate the mute.

The author would be interested to hear from any repeater group intending to build a phase-lock repeater who require a design.

—R. F. Dannecker, VK4ZFD.

— . . . —

Demodulator using an IC

(Continued from Page 4)

When the proposed Amateur satellite with the active repeater on 432 MHz. becomes operational, Doppler shift of at least ±10 KHz. will be experienced on the received signals from the satellite. It will therefore be necessary for stations receiving the signals to provide some form of tracking of the signal frequency. If such a tracking filter/demodulator as the one described in this article is used, the receiver bandwidth must be the signal bandwidth plus 20 KHz. to allow for Doppler shift.

A Service to Members

KEEP IN TOUCH THIS YEAR

with overseas magazines available through Federal Exec. Publications.

QST	$6.40
*Radio Communications	$8.80
VHF Communications	$3.75
Ham Radio	$5.50
CQ	$5.70
73	$6.50
Break-In	$3.00

Each for one year subscription by surface mail.

* Please ask for R.S.G.B. membership proposal form before ordering.

FEDERAL EX. PUBLICATIONS
Box 67, East Melb., Vic., 3002

FIG. 3 PHASE-LOCK REPEATER

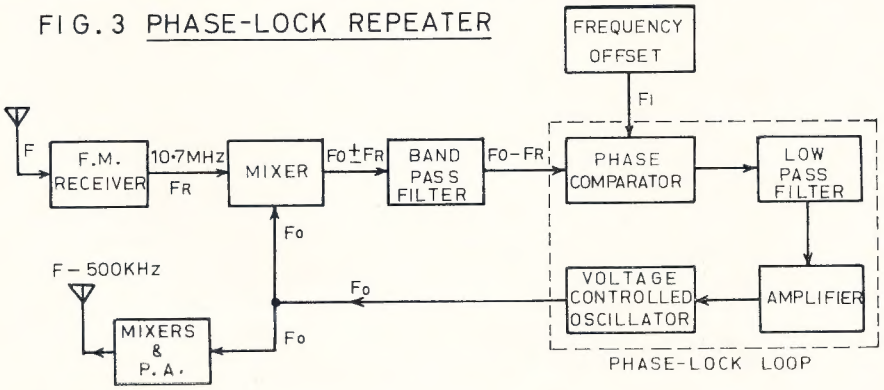

NEW FIVE-MINUTE ADHESIVE

A new rapid setting epoxy adhesive, with a bond strength of 2,000 lb. per square inch, has been developed by Davis-Fuller Adhesives Pty. Ltd. The adhesive, known as Resiweld Five, sets in only five minutes, can be sawn or planed in 20 minutes and reaches its full bonding strength in only 30 minutes.

Combining the high bonding strength of epoxy resin with the quick setting characteristics of contact adhesives, Resiweld Five was formulated as an ideal adhesive for general repairs, bonding fine breaks and all types of hobby work.

A thin, flowable liquid in texture, Resiweld Five will sell for 80c retail and is packaged as two tubes which are mixed to produce the adhesive. Curing begins immediately on contact after mixing.

It may be used on timber, glass, stone, fibreglass, steel, aluminium, sheet metal and hard plastics. Davis-Fuller expect Resiweld Five to find ready acceptance for such tasks as radio and electrical construction and repairs, lapidary work, jewellery, glassware and such craft work as model aeroplane building.

Resiweld Five has a tensile strength of 1,000 lb. p.s.i. after 10 minutes and full tensile strength of 2,000 lb. p.s.i. after 30 minutes.

Davis-Fuller Adhesives is a division of Davis Consolidated Industries Ltd.

— . . . —

COOK BI-CENTENARY AWARD

The following additional stations have qualified for the Award:

Cert. No.	Call	Cert. No.	Call	Cert. No.	Call
1438	DL9JI	1441	PA0VB	1444	WB6SMG
1439	AX2BNK	1442	AX5ST	1445	SM5AWO
1440	DK1LW	1443	HK4DF		

V.H.F./U.H.F. SECTION

Cert. No.	Call
31	AX5LP
32	AX3YET

W.I.A. D.X.C.C.

Listed below are the highest twelve members in each section. Position in the list is determined by the first number shown. The first number represents the participant's total countries less any credits given for deleted countries. The second number shown represents the total D.X.C.C. credits given, including deleted countries. Where totals are the same, listings will be alphabetical by call sign.

Credits for new members and those whose totals have been amended are also shown.

PHONE

VK5MS	320/344	VK2APK	289/296
VK6RU	316/342	VK4FJ	286/307
VK3AHO	310/326	VK4UC	285/285
VK4KS	307/322	VK4TY	284/288
VK6MK	303/324	VK3ZE	276/279
VK5AB	296/314	VK2AAK	274/279

New Members:

Cert. No.	Call	Total
124	VK3CR	101/101
125	VK5WV	100/100

Amendments:

VK2SG	262/264	VK3AMK	238/238
VK2AAH	243/253		

C.W.

VK2QL	305/328	VK3ARX	271/278
VK3AHQ	300/315	VK3XB	270/284
VK4FJ	289/315	VK6RU	266/289
VK2APK	286/294	VK3YD	263/282
VK3YL	286/303	VK4TY	259/272
VK3NC	273/300	VK3TL	254/260

Amendments:

VK3JF	195/201	VK2AAH	140/149
VK2SG	142/146		

OPEN

VK6RU	317/343	VK6MK	303/324
VK4SD	315/330	VK2EO	301/325
VK2VN	311/330	VK3ARX	301/308
VK4KS	308/327	VK2SG	298/304
VK4TY	306/321	VK4UC	298/298
VK2APK	303/315	VK4FJ	297/323

Amendments:

VK2AAH	255/269	VK3QV	130/130

FEDERAL REPEATER SECRETARIAT

Last year the F.R.S. was asked to investigate the clash of frequencies between the output of Channel 4 Repeaters and the proposed channels in the Project Australis Oscar 6 Satellite of 145.9 MHz. Although this problem has been temporarily averted, it must still be resolved because there will be future satellite programmes.

To understand the problem it is necessary to refer back to the formation of the 2 mx band f.m. nets in Australia. The availability of surplus f.m. equipment in the early 1960s prompted their use on the Amateur bands. The intended frequency was 146.000 MHz., but, as the story has it, a slip in the slide rule resulted in the evolution of Ch. A. In time, the three simplex Channels A, B and C developed. In VK2 another error resulted in 146.1 for Ch. C. About 1966/67 experimental repeaters (Orange 146.1 in, 145.85 out) and translators (Melbourne Z1 with 145.76 in, 147.6 out) existed. When the right to establish repeaters was secured in July/August 1968 it became obvious that a standard was required, hence the Wodonga Conference.

Because the basic frequency was set by the existing simplex operations a decision was required on the number of channels and the input-output frequencies. It was decided at that Conference that since the bulk of the equipment coming into service was built to a commercial specification the repeater system should be made to fit that specification. It was agreed to use four channels for repeaters with frequencies on the 100 kHz. points on either side of the existing simplex system for compatibility. This meant that the frequency range of tx tuning would be from Ch. A to Ch. 4, approximatetly 550 kHz. Likewise, the rx range extended from Ch. 1 to Ch. C, a similar 550 kHz. spread. It will be noticed that although the segment from 145.6 to 146.4 MHz. is 800 kHz., the tx and rx each use the overlapping 550kHz.

Most equipment operates satisfactorily without the need to re-tune from one channel to another. This was the specification reached. The greater the spacing between the input and the output frequencies at the repeater site, the less will be the rx desensitisation, but the practical limit is reached when the users' unit performances fall away. If there had been no simplex channels to be fitted into the scheme a separation of 2 or 3 MHz. could have been used.

In order that the maximum benefit could be obtained from the f.m. channels on a national basis it was decided to use three channels for the time being, namely one for simplex and two for repeaters. The channels chosen were Ch. B, Ch. 1 and Ch. 4. Development continued without major problems until last year when the Ch. 4 output frequency of 145.9 MHz. came into conflict with the "announced" satellite channels. As stated, although this is now clear for this satellite the problem remains for the future.

In the 2 mx band everything below 146.000 MHz. is in the International segment of the band. This means that if any future international system makes use of a frequency in use by an Australian system, then, Australia has an obligation to move. An ideal for Australia—but not necessarily the most practical solution—would be to shift all our channels that are within the International segment to spots above 146.000 MHz. (i.e. Ch. 1 and Ch. 4 outputs plus Ch. A and Ch. B). Against this there are basically the cost of replacement crystals and the ability to establish new national standards. Note that at the moment Ch. B is the prime channel in any part of the country. The adoption of this ideal would therefore leave the International segment clear of Australian fixed channel operations. However, this has received mixed reactions, VK2 and VK3 appear to oppose it, but some support is forthcoming from VK5 and VK7.

Since the rest of the world possesses various systems within the segment 145.5 to 146.000 MHz., it is important that International agreement should be reached in this region of the frequency spectrum. The available information indicates that the following frequencies are in use or allocated:

Region 1

Europe & G: majority of beacons 145.95-146.000;

DL repeater outputs: 145.7, 145.75, 145.8, 145.85, 145.9;

A.O.B. satellite channel: 145.925-145.975;

G satellite allocation: 145.85-145.95;

SM & OZ repeater outputs: 145.65, 145.75, 145.8, 145.85.

Region 2

No W repeaters;

Amsat input: 145.9-146.0;

Some early Oscar satellites used 145.9.

(Continued on Page 11)

PREDICTION CHARTS FOR FEBRUARY 1972

(Prediction Charts by courtesy of Ionospheric Prediction Service)

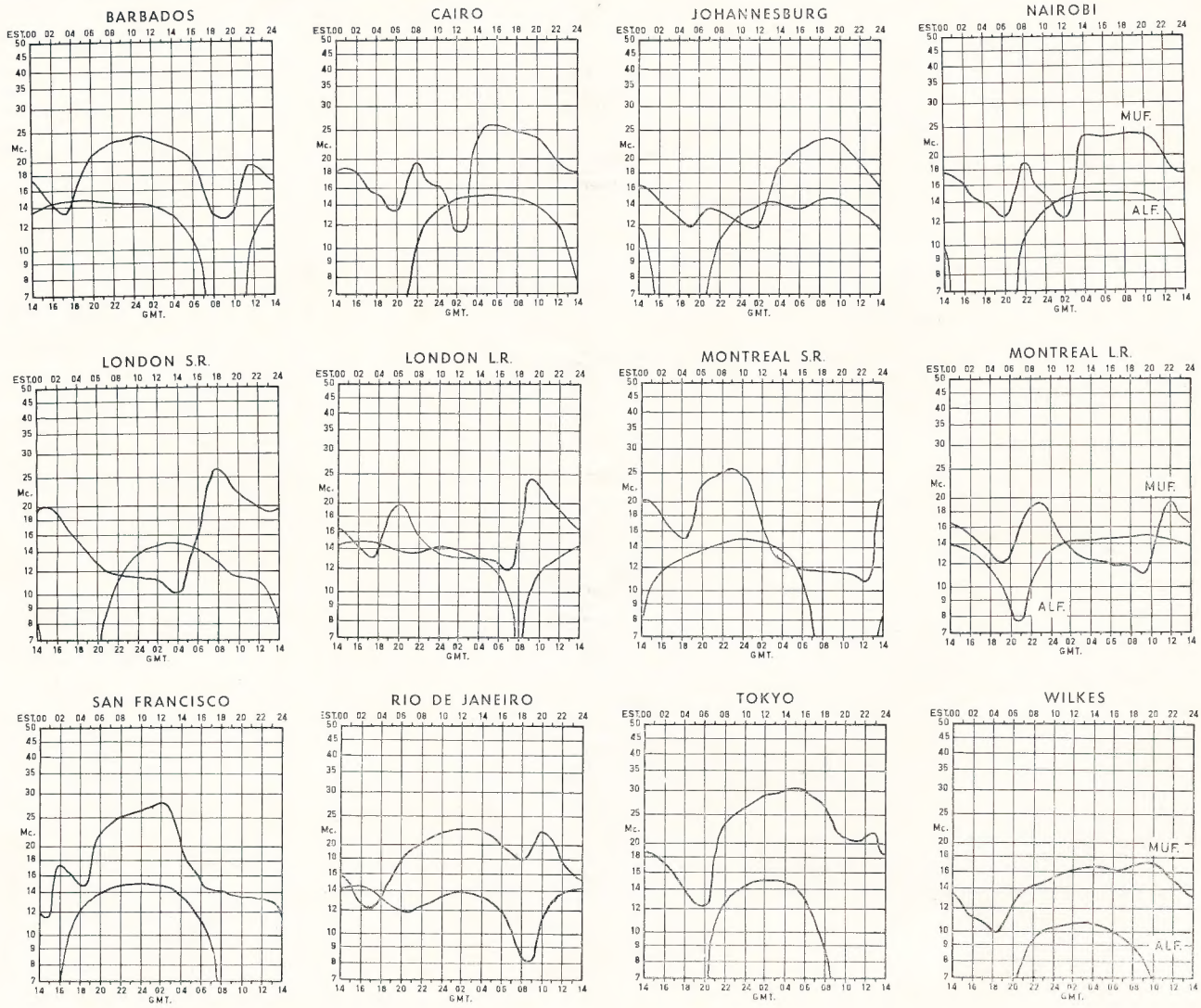

Correspondence

Any opinion expressed under this heading is the individual opinion of the writer and does not necessarily coincide with that of the Publishers.

NOVICE LICENSING—SUPPLEMENTARY REPORT

Editor "A.R.," Dear Sir,

Admittedly, in the past, the question of so-called Novice class licensees has not impinged on my normal "live and let live" (apathetic?) nature, but after reading the Supplementary Report by the W.I.A. Novice Licensing Investigation Committee ("A.R.," Jan. 1972), I was quite literally stunned by the implications of the proposals as outlined.

At this point I would like to make clear that I am opposed to Novice licensing whether called by that name or any other. However, opinion being what it is, it appears inevitable that proposals regarding this class of licence will be submitted to the relevant authority, and it is to some of the proposals as recommended to which I take exception.

Section (e) states that there should be no limitation on tenure for Novice licensees. As the standard required regarding technical proficiency would be lower than that demanded for current licensees, it is obvious that any Novice should be expected, within a given time, to up-grade to the general standard. Twelve months, or at the most two years, should be more than adequate.

A portion of Section (g) recommends Mobile operation (as a passenger). No comment—except to suggest that there must be some incredibly naive people who could imagine adherence to a regulation of this nature.

Section (i) at least gives my somewhat deflated ego a boost, suggesting as it does that techniques involved on v.h.f. and u.h.f., to which I am relegated, are more complex than those employed by my h.f. brethren. My thoughts are that if Novice licensees are to be permitted on h.f. then v.h.f. and u.h.f. should suffer equally.

The third comment relating to Section (j) is undoubtedly the gem of the whole collection, implying as it does that wherever else the Novice is allowed to run riot, he must be kept at all costs away from the happy hunting ground of the DX fields on 14 MHz. My thoughts on this are the same as for the preceding Section.

Referring to "Recommendations for Action", Section (b), proposes full membership of the Instiute for Novice licensees. I feel that this move should be resisted by all members as the voting power of this group would be out of proportion, considering the as yet unassessed worth of the scheme. Further, the voting power of the Novice licensees would naturally be predisposed toward any person or group championing their cause.

This letter was triggered off by a somewhat lengthy discussion this morning (Sunday, 9th January) on 52.525 MHz. in which was involved quite a large group of Amateurs holding both Full and Limited licences, and although I make it clear that all views expressed above are my own, the opinions of the other operators are worthy of comment. If my memory serves me correctly, only one person was for the scheme, with many reservations, whilst all other members of the group were against the proposals as they stood, or were against the principle of a Novice licence in toto.

One operator suggested that the scheme would create a "ghetto", a view to which I am inclined to subscribe.

I added my voice to the plaint that Novices would enjoy greater privileges than the present Limited licensee, and it was suggested that proposals for this group to be allowed to practice c.w. **on air** using m.c.w. crystal controlled, within their present permitted bands, would be of far more value in raising standards than jamming full the bands regardless.

The logical extensions of this idea would be to permit the present Limited licensee to pass a 5 w.p.m. c.w. test which would then allow him to use both phone and c.w. on his present allocations, **plus the 10 metre band.**

To conclude, I feel that any degradation of the present theory examination would be a retrograde step; rather, more time and effort should be expended on education programmes to assist prospective candidates in raising their degree of competence to the required level.

—Alex H. McKibbin, VK3YEO.

Editor "A.R.," Dear Sir,

I have been following arguments on Novice licensing, and was pleased to see the matter being thrashed out but I am dismayed at the final conclusion of the committee published Jan. 1972 "A.R." I am completely opposed to any reduction in the standard of the exam as it stands, the issuing of a certificate and a permanent licence on the substandard exam.

A certificate represents a degree of proficiency—not the lack of it. The standard of the exam is low enough as it is, particularly Morse code. A person can pass a 10 w.p.m. test and then completely forget it some short time later. What is the use of an exam in Morse code that does not determine whether the candidate can actually read it or not. It is a provision of the Wireless Telegraphy Act in accordance with the International Regulations that any person operating h.f. equipment must be able to read Morse code. Therefore anyone who completely forgets Morse code is an illegal operator. The test should surely be at such a speed that it will reasonably ensure that the candidate can read Morse code and will not forget it in a short time. The foregoing was a side track to illustrate that the exam is low enough in standard as it is, now back to the point.

I advocate that the Novice licence should be of limited duration and that no certificate should be issued (don't say "Oh that again" before you read the rest). The main purpose of the "restricted licence" as advocated by the committee would appear to be to provide a means of learning Morse on the air. It (the committee) does not consider that there will be a permanent group of restricted licensees or if there is they will not present a problem. I disagree on this point.

What sort of people are going to obtain lower class licences and what purpose are they going to serve? One group who, due to lack of experience or ability cannot pass the higher grade of licence in theory, Morse or both. I think these will form the minor part of the restricted licensees. The main part will be those who have some interest in the hobby but as yet have not yet gained sufficient interest to study for a full licence. Having obtained a lower class licence, people in this group will either lose interest and go out of existence or gain interest and obtain an A.O.C.P. or A.O.L.C.P.

In the proposal of the committee the licence will be permanent—the key to retaining the operator's interest in Morse code is that he can use c.w. only. There is no other reason why he should not have phone privileges as well. In fact if a large group of these operators do retain their licences, and also they will probably be given full membership in the Institute, they will form a disgruntled pressure group. After all, why shouldn't they use phone: Morse code is not the most important thing in the world. Give them phone and they will forget Morse code, defeating the purpose of the whole thing. There will also be some who will forget their code and cease to operate, retaining their licence for prestige reasons only—a licence deserving no prestige.

The main bone of contention about a limited period licence is that when the licence expires and the operator is still interested, he will become a pirate. Why this objection is raised when the solution is so simple I don't know—allow him to sit for the licence again.

The original proposal put forward in 1952 was that c.w. only be used in part of 3.5 and 28 MHz. and a.m. or c.w. in part of 144 MHz. with a limited period licence, 10 watts, xtal control, etc. What is wrong with that?

Consider the persons who may obtain such a licence. A large proportion will lose interest by the end of the period, in which case their licence will lapse. This could have prevented them becoming pirates for their period of interest. There should be a ready market for their old gear by the new Novices coming on. Some may lose interest in c.w. and operate 2 phone only, in which case they will obtain Limited licences. Others will, after a period of practice, obtain full licences. What about those who do none of these things and want to retain their Novice licence after the date of expiry? They simply resubmit for the Novice exam. This will ensure that they don't forget their Morse code and that they don't retain their licence for the sake of keeping it.

I advocate among other things:

1. That the period of the licence should be two years.
2. That no certificate be issued—the licence be issued on the exam results only (some statement as to the standard passed could be printed on the licence).
3. That since the licence is only temporary, they should be associate members of the Institute only.

—J. A. Adcock, VK3ACA.

Editor "A.R.," Dear Sir,

Could I add a thought to the accumulated evidence concerning Novice Licences?

The idea is a simple exam. not involving a Morse code test. Operation on Amateur segment of 27 MHz. band, phone, limited to one or perhaps five watts. Of course this would be in effect creating a sort of Citizens Band, with some favorable differences. The operators would be paying a licence into much needed government revenue, and using a call sign. Note: It is alleged many unlicensed operators are using 27.240 MHz., and if that is correct, this position would be largely rectified.

The W.I.A. should gain many more members who would mostly qualify in short time for Z calls, and many, later to A and B calls.

All the present suggestions I have heard and read about for Novice licences seem to call for a Morse test plus theory and regulation exams. These proposals together, would appear almost equivalent to the requirements for a Z call which does not require a Morse test.

Morse code seems to bluff many potential examinees. I know it's easy and should not bluff or deter anyone, **but it does.**

I personally know a large number of people aged from 16 to 60 years who would very much like to enter the ranks of Amateur Radio. Most of the younger aspirants are students who feel they have insufficient time to spare studying what **appears to them** (important point that) a difficult subject. Electronics seem so mysterious and complicated before you really study them.

Older worthy members of the community feel the days of studying seemingly difficult subjects are just beyond them, especially in rural areas where personal attendance at W.I.A. classes are not practical.

Many keen aspirants have tried the exam. sometimes two or three times, but they just cannot quite pass the present standards.

Give all these potential Amateurs an easier but restricted chance, and I am absolutely certain most of them would get the confidence and practical knowledge to upgrade their qualifications.

Concluding, I claim **considerable importance** should be attached to encouraging and helping youths with worthwhile hobbies, as a distinct community obligation by more senior citizens. Amateur Radio is one of the finest, as we all know.

—K. V. Scott, VK3SS.

[International Radio Regulations require Morse Code proficiency for operators of Amateur Stations on the 27 MHz. band—see page 32 of the Handbook.—Ed.]

REPEATER FREQUENCIES AND AUSTRALIS OSCAR "B"

Editor "A.R.," Dear Sir,

The Geelong Amateur Radio Translator Group notes with concern the suggestion in the VHF Notes in Dec. "A.R." that repeater frequencies may be changed to avoid a clash in frequencies with the Australis Oscar "B". We fully appreciate that the choice of frequencies was determined by international as well as (or instead of?) local considerations, but we believe that the choice of an up-link frequency for the satellite of 145.9 MHz. is not in the best interests of the Australian Amateur.

The problem arises because the satellite up-link frequency of 145.9 MHz. is also the output frequency for repeaters on Channel 4. The suggestion that Channel 4 repeaters be turned off during satellite passes (i.e. approximately every two hours) is impracticable, and contrary to the whole concept of a service repeater. It is unlikely that repeaters will get into the satellite; trouble is more likely with Amateurs working into the satellite being heard on carphones tuned to the repeater.

The suggested alternative is to shift the Channel 4 output frequency. This means at least one, perhaps more, new crystals for every Amateur who uses a Channel 4 repeater—or Channel 1, since Channel 1 will also have to shift for conformity. Taken over the whole of Australia, the value of crystals thus rendered useless would be considerable. And the cost of a replacement crystal is certainly no trifle. If, as has been suggested, the receive frequencies are shifted 1 MHz. up (Ch. 1 to 146.6, Ch. 4 to 146.9) the performance of most carphone receivers will fall off before those figures.

The repeater frequencies were fixed at the Technical Group Meeting at Wodonga in September 1968. These frequencies were fixed as permanent national frequencies, and the decisions of the meeting were publicised in "A.R." Licences have been obtained and a good deal of money invested on the basis that these frequencies would remain as fixed. Now, decisions seriously prejudicing the use of these frequencies have been made without publicity or opportunity for adequate discussion, and the

(Continued on Page 11)

Amsat 1971 Annual Report

The Radio Amateur Satellite Corporation (AMSAT) was formed in 1969 to provide Amateur satellites and space experiments for the Amateur Service. Membership currently numbers over 460, including over 40 member societies, and is world-wide with Amateurs from some thirty countries represented.

ACCOMPLISHMENTS TO DATE

Amsat-Aircraft Flight Tests. -In connection with the Amsat-Oscar-B satellite project, two series of aircraft flights of a prototype translator developed for the satellite were sponsored by Amsat during 1971, one covering the East Coast of the United States and the other covering the West Coast. The first series began with checkout flights on May 2 and 12, and culminated May 15-16 with a two-day flight which covered from Virginia to Maine, parts of Canada, and west to Illinois. The May 15-16 flight was scheduled in recognition of World Telecommunication Day celebrated May 17, and a report on Amsat's participation was sent to the International Telecommunication Union (I.T.U.). It is estimated that some 200 to 300 stations participated in this flight test.

The second series of flight tests was conducted by the Jet Propulsion Lab. Amateur Radio Club, an affiliated member club of Amsat, with flights over California on Aug. 28, Sept. 11 and 25. This series was perhaps even more successful, and one station alone reported completing 17 two-way contacts through the translator.

The main purpose of these translator flight tests aboard aircraft is to help interested Amateurs prepare for operation with the Amsat-Oscar-B satellite and to gain useful technical and operational experience to help assure readiness in using the satellite once it is in orbit.

World Administrative Radio Conference.—The I.T.U. World Administrative Radio Conference on Space Telecommunications and Radio Astronomy completed its meeting in July. The Space Conference defined a new "Amateur Satellite Service" and made provisions for Amateur satellites to operate in the 40, 20, 15, 10, 2 and ¾ metre bands, as well as in a new band, 24 to 24.05 GHz. Amsat provided much of the background supporting material on Amateur satellites to several of the delegations represented at the Space Conference, and also advised the I.A.R.U. observer team which represented Amateur Radio at the Conferenc.

Amsat Addresses and Presentations.—Amsat was represented at numerous Amateur gatherings during the year, and provided several lecturers for a University of Hartford graduate workshop organised to develop curriculum to assist teachers of all grade levels to use Amateur satellites as an educational tool for teaching science and physics in the classroom.

Amsat members presented a paper, "Spacecraft Telemetry Systems for the Developing Nations," co-authored with members of the W.I.A. Project Australis Group, at the I.E.E.E. National Telemetering Conference held in Washington in April, and also provided material for expanded Space Communications sections of the 1972 A.R.R.L. and R.S.G.B. Handbooks.

A report and recommendation on Amateur satellites were prepared by Amsat members and presented at the February Special Joint Meeting of the International Radio Consultative Committee (C.C.I.R.). Additional documents are now being prepared by Amsat for introduction into future C.C.I.R. meetings.

CURRENT ACTIVITY

Amsat-Oscar-B. — Significant progress was made during the past year on Amsat-Oscar-B (A-O-B), which is now being readied for possible launch next year. The prototypes and flight units have been completed on the following sub-systems of A-O-B: the 24-channel Morse code telemetry system developed by W5CAY; the 432-to-146 MHz. ten-watt linear translator developed by DJ4ZC and DJ5KQ in Marburg, Germany; the two-to-ten metre linear translator built by W4RUD, WA4DGU and K3JTE, the 35-function command system provided by W.I.A. Project Australis, and the instrumentation converter provided by W3GEY, A-O-B Project Manager. In addition, prototypes of the W.I.A. Project Australis 146-to-435 MHz. f.m. repeater and 60-channel teletype telemetry encoder were completed.

A breadboard of Codestore, a Morse code message storage device developed for Oscar satellites was constructed: This system is designed to store emergency messages, operational information on the satellite and orbit information, for repeated transmission to the ground over the satellite telemetry system. The messages can be loaded and reprogrammed by ground stations. A further description of Codestore is contained in the June 1971 issue of "Amsat Newsletter". Work is currently proceeding on flight and flight-backup hardware, and on the solar cell and wiring harness assemblies.

Amsat received word in February that N.A.S.A. will undertake the launch of A-O-B, and it now appears most likely that A-O-B will ride piggyback with the ITOS-D meteorological satellite into a planned 1500-km. polar orbit. In addition, the U.S. Federal Communications Commission notified Amsat that they would waive certain American regulations as they apply to A-O-B, and would permit Novices and Technician licensees in the U.S. to operate through the two-to-ten metre translator.

ATS-G Syncart Experiment.—Two years ago Amsat submitted a proposal to N.A.S.A. to provide Amateur experiments for launch on the ATS-G Applications Technology Satellite in 1975. Amsat recently amended this proposal and has now proposed a Syncart (Synchronous Amateur Radio Translator) experiment for ATS-G. As proposed, Amsat will provide to N.A.S.A., at no cost, a 146-to-435 MHz. 20-watt linear translator for integration into the N.A.S.A. ATS-G spacecraft. ATS-G is planned for geostationary (synchronous) orbit and will contain a 30-foot parabolic reflector available for the Syncart experiment, providing the rare opportunity for Amateurs to use a synchronous satellite on a regular basis with modest Amateur equipment.

Syncart is designed to demonstrate the usefulness of the Amateur satellite service in providing emergency communications, educational training, and experiments with small-terminal multiple-access communications. Further details on the proposal and the characteristics of the experiment were published in the June 1971 "Amsat Newsletter".

Skylarc-Skylab Amateur Radio Communications.—Another proposal was submitted recently to provide, again at no cost, Amateur station equipment for Skylab-A, N.A.S.A's manned orbiting laboratory scheduled for launch in 1973. The project, named Skylarc (for Skylab Amateur Radio Communications), is designed to encourage the use of space techniques by Amateurs throughout the world, while providing the opportunity to communicate directly with astronauts in Skylab operating on 10 metres s.s.b. during their spare time. In addition, Skylarc could provide emergency backup communications for the astronauts who will be out of contact with N.A.S.A. tracking stations for periods as long as ninety minutes. Skylarc is also expected to have useful educational applications in schools and at home.

Amsat members at the N.A.S.A. Goddard Space Flight Centre, Manned Spacecraft Centre, and Marshall Space Flight Centre have been actively assisting with the project. Dr. Owen Garriott, one of the astronauts in training for Skylab, has indicated his interest in participating in Skylarc activity. He is one of Amsat's more recent members, and happens to be W5LFL.

Skylab-A is planned for a 430-km. circular, 50-degree inclination orbit expected to bring it within range of most Amateurs around the world. The use of the 10 metre band for Skylarc would enable widespread participation using readily available Amateur equipment. Further details on the Skylarc proposal can be found in the Sept. 1971 "Amsat Newsletter".

FUTURE ACTIVITY

In summary, Amsat is now involved in three major projects, extending through the mid-seventies. Amsat-Oscar-B, expected to be launched in 1972, has a planned lifetime of one year, thus providing Amateur satellite communication service to 1973 or possibly 1974. Skylarc, if accepted for flight aboard Skylab-A, would be expected to fly around April 1973 and last until the end of 1973. The third project, Syncart, if approved, can be expected to fly on the ATS-G satellite around 1975, providing a regular communications capability from geostationary orbit until 1978, or even later if all goes well. It is hoped that these three projects will bring about new achievements in the Amateur satellite service for which we can all be proud.

(Sgnd.) Perry I. Klein, K3JTE.

— . . . —

KILOVAC VACUUM RELAYS

From R. H. Cunningham Pty. Ltd. comes a brochure detailing the specifications of Kilovac vacuum relays with rated operating voltages upwards from 2.5kv. The Kilovac Corporation of Santa Barbara, California, also market Dowkey co-axial relays and Penta r.f. power tubes.

It's as Simple as

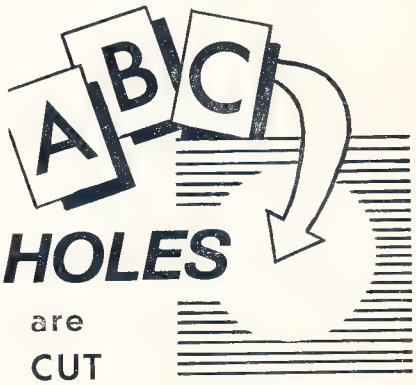

HOLES are CUT

QUICKLY and so EASILY with

"Q-MAX" CHASSIS PUNCHES

A Drill Pilot Hole.

B Place "Q-Max" Punch in position.

C "PRESTO" . . . a neat burr-free hole . . .

IN SECONDS!

SIZES: From ⅜" to 3" Round; 11/16" and 1" Square; and 21/32" x 15/16".

Use "Q-MAX" Punches in—
Factories, Workshops, Garages.
Also for Car Radio Installations, etc., or at Home.

Write TODAY for FREE Literature

R.H. Cunningham PTY. LTD.

VIC: 608 Collins St., Melbourne, 3000. 61-2464.
NSW: 64 Alfred St., Milsons Point, 2061. 929-8066.
WA: 65 Balcombe Way, Balga, Perth, 6061. 49-4919.
QLD: L. E. BOUGHEN & CO., 30 Grimes St., Auchenflower, 4066. 70 8097.
SA: ARTHUR H. HALL PTY. LTD., 1-3 The Parade West, Kent Town, 5067. 63-4506.

"Q-MAX" Punches AR2/72

Name.....

Address.....

CORRESPONDENCE

(Continued from Page 9)

fait accompli hidden in a para. in the VHF Notes. We are told to communicate with the W.I.A. Federal Repeater Secretariat if we have any problems or suggestions concerning repeaters, but I am still waiting on their replies to letters of mine dated 25th May and 12th July, 1971. As the number of Amateurs using repeaters far exceeds those who will be using the satellite, the Committee of the Geelong Repeater would like to hear their views expressed.

—D. J. Laidlaw, VK3ZTA, Secretary, Geelong Amateur Radio Translator Group.

[The Federal Executive of the W.I.A. wish to assure the Geelong Amateur Radio Translator Group and other interested parties that no decisions have been made concerning repeater frequencies and that it is not the intention of the Institute to make changes of this nature without members being given prior notice and opportunity for discussion. It is true that a problem has arisen since the 1968 Wodonga meeting and that this has assumed a greater degree of importance since the I.T.U. Space Conference held in Geneva last year. The question will no doubt be raised at the next Federal Convention (held in Melbourne this year over the Easter week-end) and all interested parties are asked to make sure they contact and pass along their views to the Federal Repeater Secretariat and their Federal Councillor to enable all points of view to be fully discussed at this Convention.—D. H. Rankin, Federal Vice-President, for Federal Executive.]

"SALTY" W2HWA PASSES ON

Editor "A.R.," Dear Sir,

I was recently in contact with WB2OZW in New Jersey and received information regarding a very well known Amateur to Australia has passed away.

W2HWA, Sidney ("Salty") C. F. C. Belcher passed away on November 13, 1971.

"Salty was a very well known Amateur in Australian circles on c.w. and s.s.b. and was especially known while he was active as Chief Radio Officer of the "Queen Mary" before the ship was sold to an American company.

—Howard A. Lilley, VK2AYT.

☆

OVERSEAS MAGAZINE INDEX

Key (all 1971): 1, "Ham Radio," July; 2, "CQ," Oct.; 3, "73," July; 4, "QST," Aug.; 5, "Radio Communication," Sept.; 6, "Shortwave" Magazine, Aug.; 7, "Radio ZS," Aug.

Antennas: Rejuvenating that old Prop-Pitch Rotator (4); Review: Kirk Helicoidal Beams ($90 to $1,100 in U.S.A.) (4); Dipole Facts (6).

Accessories: CRT Intensifier for R.t.t.y. (1); 6 mx Antenna Coupler (1); Audio Signal Generator (3); A Filter Box for C.w. Ops. (3); A Technique for Burst Two-Tone Testing of Linear Amps. (4); How to make a low-cost Keying Mechanism (4); R.F. Triggered C.w. Monitor (this fellow has designed the very thing) (6).

General: Scandanavia, The Balkans and North Africa, the story of their Amateurs (2); Why use f.m., advantages and disadvantages (2); 2 mx f.m., simply and economically (2); "CQ" Reviews: The Swan Twins (600R and 600T, reviewer liked them) (2); "CQ" Reviews: The Swan FM-2X (2); Semiconductor Curve Tracer for the Amateur, Part 1 (4); A Tale of Two Crystals, crystals are not always stable (4); Cruise of the "Chamaru", maritime mobile in a tri-maran (6); Moonlight Madness, ZS1SP tells the story of an emergency communications operation in Capetown during flooding (7); History of Amateur Radio in South Africa (7).

Receiving: IC Rx for 80 mx (1); Pip-Squawk Mk. II. (4); Review: Ten-Tec RX10 Comm. Rx (4); Tuning the V.h.f./U.h.f. Spectrum (7).

Transmitting: The Motorola 80D on 220 MHz. f.m. (2); Solid State 2 mx f.m. Tx (1); Miniature Add-on Oscillator for 2 f.m. (3); A 3-4 MHz. Franklin V.f.o. (claims extremely good stability) (4); The Cabover Kilowatt (mobile/portable in comfort) (4); 80 mx Integrated Circuit Transceiver (5); Transistor Modulator, a.m. is not yet dead (6).

Other: An IC Audio Processor (3); Camera Conversion from fast to slow scan t.v. (1); Home-brew DX prediction (4); A Pulse Count Discriminator Unit (5); Varactor Triplers for v.h.f. (6); High Impedance Voltmeter (6).

SMALL MECHANICAL DRIVES

Four new miniature drives, suitable for fine manual tuning of equipment ranging from domestic radio receivers to professional telecommunications equipment and scientific instruments, have been added to the range of small mechanical drives made by Jackson Brothers (London) Ltd.

The **Accelerator Spinwheel Drive** (Fig. 1)—Cat. No. 5810—is a cord drive unit intended for modern radio receivers with extra-long scales. It incorporates a 2¼-inch diam. (57 mm.) zinc-alloy flywheel driven through nylon-to-brass step-up gears at more than twice the speed of the drive-shaft. The complete unit weighs only 6 oz. (170 g.) but provides an inertial effect equivalent to a much larger flywheel, permitting rapid traverse of the scale.

The **Nylon-Bearing Spinwheel Shaft**—Cat. No. 4589/Nylon—is another new cord drive, to which various flywheels can be attached. To provide an ultra-smooth 'quality' feel suitable for expensive stereograms and radios, it incorporates - in place of the usual brass-to-brass bearing—two molybdenised nylon rings placed between a stainless steel shaft and a brass bushing.

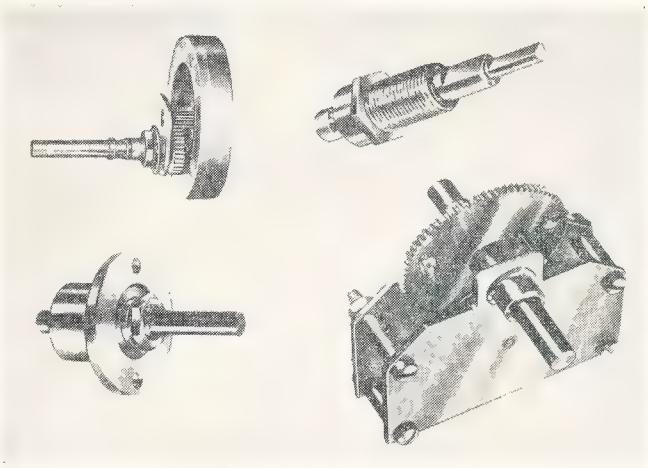

Fig. 1: top left; Fig. 2: bottom left; Fig. 3: top right; Fig. 4: bottom right.

The **10:1 Epicyclic Ball Drive** (Fig. 2)—Cat. No. 5857—is a powerful but compact drive suitable for transceivers, capacitance bridges, signal generators, etc. It provides a 10:1 reduction ratio between coaxial input and output shafts, with a limiting output torque (beyond which internal slipping occurs without damage) greater than 30 oz.-in. (2.2 kg-cm.). It measures 2-1/8 inches (54 mm.) overall length by 1-7/16 inches (36.5 mm.) diameter of mounting flange.

The **Twin-Speed Epicyclic Ball Drive** (Fig. 3)—Cat. No. 5845—is intended for driving a single potentiometer or variable capacitor—e.g. in small radio receivers. Two co-axial inputs provide direct drive for coarse adjustment and a 5:1 redutcion for fine adjustment. Limiting output torque is 8 oz.-in. (0.6 kg-cm.).

The earlier **G80 Drive** (Fig. 4)—Cat. No. 5590—built to British Post Office specification and intended for professional telecommunications receivers, is now available with either 180 or 360 degrees movement of the output shaft. It provides an 80:1 reduction ratio, without backlash, between co-axial input and output shafts, and consists of a 10:1 friction drive and an 8:1 gear drive in series. Limiting output torque is 24 oz.-in. (1.7 kg-cm.).

Further information can be obtained from Jackson Brothers (London) Ltd., Kingsway, Waddon, Croydon CR9 4DG, England, or from the Australian agents, British Merchandising Pty. Ltd., Shaw House, 49/51 York Street, Sydney, N.S.W., 2000.

AROUND THE TRADE

Our good advertisers Hy-Q Electronics Pty. Ltd. announces the opening of their office in Sydney from Feb. 1 in Suite 204, 284 Victoria Ave., Chatswood, N.S.W., 2067, telephone (02) 419-2397 (Telex 22631), under Mr. Jeff Wratten as Area Manager for N.S.W. and A.C.T., providing technical and sales assistance to their many clients in these areas.

From Bail Electronic Services and from "Ohm" Magazine comes news of a raffle to win a Yaesu Musen FT101 for just $US2.00. Further details from "Ohm" Magazine (available through F.E. Publications), HARTS, of Hong Kong, or from Fred VK9FH, the recipient of the proceeds towards a tractor for the Airmen's Memorial School, Ewasse, New Britain. Bail Electronic Services are Australian Agents for Yaesu Musen and offer both sales and service.

Andrew Antennas of Melbourne announce a successful $750,000 contract by P.M.G. Dept. to supply and instal equipment for the Darwin-Mt. Isa radio telephone link, comprising 105 microwave antennas on 48 towers due for completion early 1974. The 10 and 12 ft. dish antennas are for manufacture at their Reservoir plant where they operate Australia's largest metal spinning machine.

SUPPORT OUR ADVERTISERS!

Support yourself also by saying you saw it in "Amateur Radio"

FED REPEATER SECRETARIAT

(Continued from Page 8)

Region 3

ZL repeater channels: 145.6, 145.65, 145.7, 145.75;
ZL simplex channels: 145.8, 145.85, 145.9, 145.95, 146.0 (only 145.85 and 146.0 to be used);
ZL a.m. repeaters: 145.725, 145.775, 145.825;
VK repeater outputs: 145.6 (Ch. 1), 145.7, 145.8, 145.9 (Ch. 4);
VK simplex channels: 145.85 (Ch. A), 146.0 (Ch. B);
Satellite: 145.8.

If a segment were to be set aside it would appear that the present A-O-B selection of 145.95 MHz. centre frequency plus or minus 25 or 50 kHz. is best. Whilst this is in the part of the band occupied by Region 1 beacons it is currently free from fixed channel operations. It is as unlikely that the Germans would enthuse about closing down or shifting their repeater frequencies as we are.

The following Ch. 4 systems are current in VK: Adelaide, Geelong, Gippsland, Sydney, Newcastle (not yet in use) and Northern Tasmania (temporary allocation).

There is a Federal Convention to be held this Easter in Melbourne. A policy is needed on future Australian involvement in the Amateur satellite programme and the frequencies of our systems. Arising from this would be the frequency segments in the area for International satellite work and the policy to be adopted if World Agreement places the International segment within the present Australian allocation. Ought we to move all our systems now outside the International segment? The possible answers to these and allied questions should be discussed NOW by interested parties and the decisions passed on to your Federal Councillor for his guidance during the Convention.

Other questions which the active v.h.f./u.h.f. operator should be considering are:

(1) The necessity for band planning so that all modes and systems can be accommodated without undue confusion;
(2) The need to determine a beacon policy so that the development, location, method of operation and frequencies can be implemented to achieve the best possible results for Amateur and scientific uses;
(3) It was suggested that the 2 mx simplex Channels A and C be altered by 4 kHz. from their present frequencies so as to become 145.85 and 146.15 MHz. respectively. Is there any desire for this move?
(4) The relative need to consider the adoption of a third repeater channel if the co-channel interference (as in the Melbourne area) becomes too great. If one is adopted it would have to fit into a national scheme so that all users could equip themselves to suit.

DX

Sub-Editor: DON GRANTLEY
P.O. Box 222, Penrith, N.S.W., 2750
(All times in GMT)

These notes are being written on Dec. 15; the calendar says that summer has arrived, however a glance out of the window shows that there is a mistake someplace. Our glorious Blue Mountains are black today, a condition which seems to prevail in the DX bands at the present moment. I have noted some good signals coming in on 15 and 10, and at the time of writing 10 metres is open to the West Coast of America and the Pacific. As a matter of interest, the New Zealand t.v. is belting in on Channel 0 with 5 by 9 sound and a trace of picture.

As the closing date for the February issue is well before the end of the month, I have nothing from the VK gang at this early stage, and thus the basis for all notes in this issue will be Geoff Watts DX News Sheet and the Florida DX report.

Operation by CR5XX from Sao Tome had been promised for Dec. 3, but a late report said it had been delayed until Dec. 12. The operators were CR6GA and XX; QSL information s.s.b. QSOs to WA3HUP and c.w. to CR6NN.

Yonten AC5TY has been reported on 14205 with 4S7PB acting as MC, also said to be on 14024-030 c.w. with the W6 stations at 1600z. Bhutan expects to be assigned an official I.T.U. prefix shortly, as AC5 is not official. AC3 and AC5 with CE0X and Clipperton are on a list of possible operations for Signal One operation with Larry K2IXP/6 as one of the operators in 1972.

DL0EM from Borkum Lighthouse in the East Fresian Is. is currently active for a few days and asks that all QSLs for this operation go to DK3JQ. Another DJ station who has been travelling around is DJ6QT who has just been on from CT3. He asks that QSLs for his recent operation from EA8GK be sent to the home QTH.

GB3MSA operating from Poldhu and VB1MSA from Signal Hill were active from Dec. 11 to 16, the former by the Cornish Radio Club, the latter by the Society of Newfoundland Radio Amateurs under the direction of President VO1FX. 15 to 80 metres were used on this occasion to commemorate the 70th anniversary of Marconi's first Trans-Atlantic wireless message on Dec. 12, 1901. A special QSL via S.O.N.R.A., Box 1226, St. Johns, Newfoundland, will be issued, and they also plan to issue a special certificate to all who work both stations during the period of operation. Other speial stations were DL0EM, GB3MNI and GB3PMA.

Some news from ET3 says that ET3USC is frequently active from 1105 on 21 MHz. c.w., QSL to Lee Spencer, Box 201, Company "A", U.S.A.F.S., Asmara A.P.O., New York, 09843, or to his WA4AGT home QTH. Another station, Dave ET3DS, who is ex 8R1S/5H3MA now has a new manager, VE2DCY.

HK0BKX from San Andres is a regular in the YL net 14332 s.s.b. 1800z with manager WA6AHF. WA6UCW/HK0 was due to go there for 160 metre operation from Dec. 25 to Jan. 7. HB0XHS as far as we here are concerned has K0IQM as manager.

Prefixes of interest seem to be in the news every week, PJ9JT and BF were on for the contest week-end up to Dec. 1, W1BIH and W2CCE were the respective managers. PJ4HT for a week to Dec. 7 by PJ2HT from Bonaire, QSL to home QTH, C. de Wit, Box 879, Curacao, Neth. Antillies. Karl TU4AA with another special cards to VE7BWG. WC4BCC from Dec. 16 to Feb. 29 from Birmingham, Alabama, whilst WM1NSA to Dec. 13 from Framingham, Mass. YA2AG has been issued for some unspecified reason, and his address is A. Baron, Kabul (I.D.), C/o. Dept. of State, Washington D.C., 20521, U.S.A. HS0UDN is a club station, address of which is via the HS Bureau, Box 2008, Bangkok.

Some current or recent activity from the VP call areas commences with VP1BH on all bands and very active on 80 metres, manager is VE2AKZ. VP2DAE from Dec. 20 to 24 by WA3HRV on all bands; manager is K3RLY. VP2VAI Dec. 4 to 6 by the KP4 boys, also VP2VAG whose manager is VE3GMT or direct to Box 440, Tortola, B.V.I. Pete VP2VAM has the same manager. Other VP operation of interest is VP2EQ from Anguilla; QSL to WB2ZMK. VP2GI from Grenada, address is Box 421, St. Georges. VP2KF from St. Kitts, now has VE2DCY as manager. From down in VP8 we note that VP8LK is on Adelaide Is., where he has been for most of 1971. His cards go to G3NOM. Mike VP8MH is on from Argentine Is.; QSL to M. Hinchcliffe, 40 Elmwood Drive, Thornton-Cleveleys, Lancs., whilst VP8MJ is also there.

Geoff Watts is anxious to have all QTH and QSL information for all stations currently active in the VP8 call areas. He would appreciate a line to QTH, 62 Belmore Rd., Norwich Nor 72-T, England.

VR1, British Phoenix, has VR1AB giving us some fine operating. He is regularly in the Pacific net, and asks for his cards to be sent to K3RLY who also handles this chore for VR1AC. VR1W due to go QRT about mid-Dec.; QSL to W6CUF. Danny VR1AA, of course, is still active from Gilbert and Ellice, and I mean active. 4046 QSOs between August and December, 75 per cent. being on s.s.b., so he is concentrating on c.w. QSLs also handled by K2RLY.

Bill VQ9WF currently active from Chagos using 350 watts to a three element beam, expects to return home to his WA2UUV locale in 1972. He asks for all cards to go to his home address or to W4NJF after his return, which will be very shortly.

Ascension Island is not very often in the news, but there is usually some activity from there. ZD8KO, Keith Orchard, C/o. B.B.C., Ascension Is., South Atlantic (QSL with two IRCs). ZD8CS, QSL to K1BTD; ZD8JK, manager WA3FNK, are the regulars, whilst ZD8TS returns to his G3ZST QTH in Dec.

5N2AAN and 5N2ABG are QRV 7005 c.w. week days 0545-0600. ABG will be on 14180 0600-0630 beamed to the Pacific on the long path and asks for no breakers.

KS4CJ, Swan Is. operation by KV4AM from Dec. 8 to 21, has been reported under way successfully, and they ask for all QSLs to the home QTH. Transfer of the Island to Honduras has still to be approved by the U.S. Senate, but as they are only 100 miles from the HR coast, they will cease to count as a separate DX country once the transfer has been completed.

Still an abundance of K stations populate the bands from the Pacific areas. KB6DB, manager K3RLY; KJ6CF, Box 101, A.P.O., San Francisco, Calif., 96305; KM6DX, L. Collins, Box 100, U.S.N.A. Commsta, F.P.O., San Francisco, Calif., 96614, active from Midway, whilst down in the colder regions WB0CUB/KC4, Gary, is located on Byrd Station. His QSLs go to K0YKJ.

As I am running out of space here, I will briefly list some stations just appearing in the news sheets. Their managers, where known, will follow the call in brackets. HS1ABD (K5QHS), JX1AK (LA1FH), OH0NI from Nov. 27 to 28, QSLs direct. TG9YN, who is ex YA1BW, QSL manager DL8DF. 5H3LZ (G3-USY), 9L1VW (W9FIU). VK9CH on Bougainville to WA6MRG, this counts as New Guinea; VR5FX (ZL2AFZ), 9M8FMF (W1YRC).

Silent Key.—W6LN, Thor E. La Croix, well known in the DX field, passed away on Nov. 20, while Bob Rowley, HP1BR, whose call was also prominent amongst the DX'ers, died on Nov. 28. I would like to add a word here in recognition of the late Graham VK2AGH, whose passing a few months ago left a void in Amateur circles. I would like to take this very belated opportunity of acknowledgment of a truly great operator who is sadly missed. Graham was one of many VK2 Amateurs who gave me help and encouragement when I turned to Amateur Radio as a relaxation after the war, and one whom I will always remember as a friend.

AWARDS

Minor States Certificate. For working countries in the list C3 (PX), HB0, HV, LX, MI (9A) and 3A. DX stations need any two for the basic award. GCR list plus 10 IRCs to OE7PR, Herbert Prettner, Pradlerstr 68, A-6020, Innisbruck, Austria. This award, which to me seems rather pointless and expensive, is also available to SWLs.

Sargenda Award. For working Sardinia stations since 1st June, 1965. DX stations need 10 points on the basis of one point per IS station per band. GCR list plus 10 IRCs to Sezione A.R.I., Box 25, Cagllari, Sardinia, Italy.

Worked All GITMO. For working six KG4 stations since 1st Jan., 1971. GCR list to W.A.G. Award, C/o. KG4EY, FTG Box 551, F.P.O., New York, 09593.

Worked Sweden Award. There are five awards here. Worked 80 SM on 80 metres, 40 SM on 40, 20 SM on 20, 15 SM on 15, and 10 SM stations on 10 metres. Each application for any single award must include all SM call areas, SM1 to 0, SK or SL stations also counting. GCR list plus six IRCs to Gotland Island Radio Club, Box 336, S-621-03, Visby 3, Sweden. Extremely hard to get the five, but who knows. The awards are available to SWLs on a heard basis.

Amendments. For the **All Capital Cities Award** which I prepared for the January issue, please amend custodian to read DL2HQ or DL9OT. Add Liberia and Sth. Africa to I.A.R.U. region 1 award.

Awards are always a subject of interest. In the past many of my contacts have expressed their appreciation of "A.R." for publishing these when available, and a friend of mine in England, who is rather involved with the C.H.C. set-up, is forever mentioning his inability to do little else than look after the awards for which he is custodian. Personally I feel that the award situation has become similar to the D.X.C.C. list, somewhat top-heavy. I'm not knocking awards, I'm very much in favour of them as an incentive, but any goal has to be worth getting and I feel that some of the awards which are available are just not worth the paper on which they are printed. They are so easy to get and the cost is so high, that one does not have to look too hard for the reason of their existence. They are part of the general Amateur Service, and as such, I write them up. This does not imply that I agree or disagree with the ethics of any award listed, but I do suggest that if an award looks too rediculous or the cost is out of proportion to its value, then forget it and concentrate on one of the better ones.

All for this month, 73 de Don.

— • • • —

DX-PEDITIONING HOT NEWS

Alf Matthews, VK3ZT, comes up with plans being formulated by John Martin, VK3JW, for an all-Australian activation of Mellish Reef, and, if A.R.R.L. agrees to new country designation, of Frederick Reef, in May or June this year.

Mellish Reef, thanks to earlier efforts of Larry Pace, VK4CGB (now K2IXP/6) and John was given new country status last year. Both would be new "countries" and are believed never previously activated.

Dates and plans are still tentative. Support is solicited from VK operators to enable the operation to get under way. Apart from anything else, a boat is being sought so as to coincide with the most favourable wx conditions in the changeable Coral Sea. They want to make this an all-Australian effort although several overseas interests are most keen to participate. The loan of equipment is also sought to make this DX-pedition cover all bands (including 160 mx) as well as s.s.b. and c.w.; generators and other gear would be needed quite apart from running stores.

John also has made application for a possible "second string" operation for an all-Australian DX-pedition to China and Tibet, but here again some assistance is required.

How about it? Can you help in any way? If so, now is the time to come to their aid. Mellish and Frederick Reef may not be as tough a proposition as Rockall in the Atlantic, but it will be hard work. Please write **now** to VK3JW or VK3ZT (QTHR) or telephone C3-088-2897 (a.h.) to Alf for further details.

— • • • —

CONTEST CALENDAR

Feb. 12/13: John Moyle Memorial National Field Day Contest, 1972 (see Nov. "A.R.," p. 13).

Feb. 12/13: ZL V.h.f. Field Day.

Feb. 12/13: R.S.G.B. 1st 160 mx Contest.

Mar. 11/12: R.S.G.B. B.E.R.U. Contest.

Mar. 25/27: B.A.R.T.G. Spring R.t.t.y. Contest.

SUBSCRIPTIONS DUE

All members of the W.I.A. are reminded that annual subscriptions are due and should be remitted to the office of the Federal Manager, P.O. Box 67, East Melbourne, Vic., 3002, as early as possible.

"A.R." will not be despatched to anyone listed as unfinancial and as back copies may not be available on request some discontinuity may occur.

The error in this Notice on page 15 of Jan. "A.R." is regretted.

VHF

Sub-Editor: ERIC JAMIESON, VK5LP
Forreston, South Australia, 5233.

Closing date for copy 28th of month.
Times: Eastern Summer (Daylight Saving) Time.

AMATEUR BAND BEACONS

VK0	52.525	VK0MX, Mawson.
	52.100	VK0ZVS, Macquarie Island.
	53.839	VK0PF Casey.
VK2	52.200	VK2II, Sydney.
VK3	144.700	VK3VE, Vermont.
VK4	52.400	VK4WI/2, Townsville.
	144.390	VK4VV, near Toowoomba.
VK5	53.000	VK5VF, Mt. Lofty.
	144.800	VK5VF, Mt. Lofty.
VK6	52.006	VK6VF, Bickley.
	52.900	VK6TS, Carnarvon.
	52.950	VK6VE, Mt. Barker.
	144.500	VK6VE, Mt. Barker.
	145.010	VK6VE, Bickley.
VK7	144.900	VK7VF, Devonport.
VK9	144.600	VK9XI, Christmas Island.
ZL1	145.100	ZL1VHF, Auckland.
ZL2	145.200	ZL2VHF, Wellington.
ZL3	145.300	ZL3VHF, Christchurch.
ZL4	145.400	ZL4VHF, Dunedin.
JA	52.500	JA1IGY, Japan.
W	50.091	WB6KAP, U.S.A.
KH6	50.101	KH6EQI, Hawaii.
	50.015	KH6ERU, Hawaii.
HL	50.100	HL9WI, South Korea.
ZK	50.100	ZK1AA, Cook Island.

Some changes to the beacon list this month. Firstly, a letter from Mr. J. K. Walter, of the High Latitude Section of the Commonwealth Bureau of Ionospheric Prediction Service Division advises a frequency change of the Casey beacon from 53.544 to 53.839 MHz. The present power of that beacon is 11 watts to a four element yagi, but this is expected to be increased to 100 watts shortly. Mr. Walter also confirms that two 6 metre beacons will be taken to both Casey and Mawson in 1972, both with an output power of about 400 watts. Call signs and frequencies will be advised when the P.M.G. Dept. finally gives approval.

The second item from Mr. Walter's letter indicates that several Sydney Amateurs reported reception of a 6 metre beacon with a call sign believed to be prefixed with VK0 (probably VK0PF at Casey) on 52.525 MHz. on 27/11/71. At this time and for the following two days Phil VK0PF at Casey reported receiving 6 metre beacons from Australia. These reports are not definite, but they do suggest a distinct possibility of the occasional use of Sporadic-E propagation between Antarctica and Australia. If any readers have received the Antarctica beacon, Mr. Walter would be pleased to hear of it. Address: Assistant Director, I.P.S. Division, 162 Goulburn St., Darlinghurst, N.S.W., 2010.

While we are talking about beacons and the Antarctic area in particular, I am pleased to report the first hearing of a VK0 beacon, that on Macquarie Island at 1945 hrs. on 2/1/72 by Ross VK4RO. Call sign VK0ZVS, freq. 52.100 MHz., call sign in m.c.w. 1½ times before fading into noise, sigs. S1-2. Further details of this station from Chris VK0RC and Tony VK0KA indicate power output to be 20w. p.e.p., 4 el. yagi up 30 ft. Tape loop connected via vox circuit of FT200 gives "CQ VK0ZVS Macquarie Island" then pauses for 35 seconds while listening with vox open, then repeat. If you hear this station, you must reply in the pause period with an accurate signal as the receiver bandwidth is 2 kHz., preferably using c.w. at 4 to 5 w.p.m. (due to auroral flutter effects making a.m. and s.s.b. signals unreadable). Tony indicates an interest sufficent to go ahead with a linear using a 4CX250B for contact purposes, but generally for beacon purposes the 20w. power level will be used. Good luck to you Ross, hope you can make it a two-way next time.

52 MHz. DX

The 1971-72 Sporadic-E DX season for 52 MHz. has certainly been a very good one. Something has been available almost every day since mid-November. Several things have stood out this year, probably the most prominent being the greatly increased number of stations using s.s.b., mostly transceive. Coupled with this, more and more of the remaining a.m. stations were calling "CQ DX—listening this frequency before tuning," indicating a greater awareness of the increase in transceive operation.

Two further points come out of this of course. One is that all stations will need better frequency stability with a greater number of narrow-band s.s.b. receivers being used—a drifting signal, particularly if a.m. with frequency modulation, is well nigh impossible to receive on a sharply tuning receiver. There are at the present time some very poor s.s.b. signals on 52 MHz., signals very hard to tune. It is hoped that another year will give these stations a chance to improve their signals too, and some of those occupying 20 to 40 kHz. of the band due to shouting into the microphone with the gain control well up when operating DX might well look at their operating procedure—and, I might add, this applies equally as well on 20 metres too, I could name several consistent offenders on this band!!

Other interesting things to have happened on 52 MHz. during December mostly have been the working of the four ZL districts, and of particular interest to VK5 that ZL4 has been worked after a break of quite a few years, with David ZL4PG and Stan ZL4MB most active. Stan has indicated he intends doing some portable operation for the greater part of the year on Saturday and Sunday mornings, beaming VK, before their t.v. stations commence. Likely operating times will be between 1100 to 1200 hours, frequency 51.980 MHz., and on s.s.b. He may also try 52.007. Geoff ZL3RZ was just about jumping up and down one day when he could hear VK6WA and VK6ZDY but could not get them to tune below 52 MHz. That's a long haul to the West, and a path not often open, so can understand Geoff's ire! Geoff was a good signal in VK5 this year and worked plenty of stations.

Not content with spanning the Continent east to west, the Amateurs then turned their beams north on 29th December, and quite a few worked Rex VK9ZAP. Barry VK5ZMW has not forgiven me yet for working Rex over him. Barry was trying out his new s.s.b. QRP rig (5w.) and apparently tried calling Rex at the same time as I did with my 100w., the result was obvious! However, Barry did eventually make it, which is a pretty fine effort (1850 miles with 5w.). Geoff VK5ZGF/8 gave quite a number their first VK8 contact for the year from Alice Springs, so there would be quite a few people who Worked all States this year, plus VK9 and four ZL districts, not bad going chaps!

While all this sort of thing goes on, Wally VK5ZWW plods along with his meteor scatter experiments, and on 11/12/71 worked VK3AUU by this mode, with one burst of 8 to 9 seconds at 5 x 9.

Geoff VK5LT heard Channel 5A in Wollongong on 29/12/71 and saw a relatively snow-free picture for about 10 minutes. Ch. 5A was also heard rather weakly at my own QTH on the same date at 2000 hrs. This is the first time I have positively heard the t.v. station, and lends some support for my hopes that 144 MHz. DX will start to come back again next season.

MOONBOUNCE ON 144 MHz. FIRST VK TO VE CONTACT

Whilst others have been making good use of 52 MHz. Sporadic-E propagation, Ray VK3ATN succeeded in making two contacts via the moon on 1/1/72, on 144.005 to K6MYC and on 144.004 to VE7BQH.

Ray started to transmit at 2140 to 2142 (his normal transmitting period) and stood by for three seconds and back came W6MYC, and operated with him from 2142 to 2150, signals 439; then from 2150 to 2156 with VE7BQH, signals 329. Signals continued to be heard until 2206-2208, by which time the moon was getting too high for antenna.

Ray reported the half hour "window" for contact via the moon as being rather unusual, and the longest he had experienced.

A fine effort Ray, and we are glad to be able to rank you amongst the v.h.f. fraternity of Australia.

10 GHz. AUSTRALIAN RECORD

On 10,000 MHz. at 1245 on 30/12/71, Des VK5CU/P located at Black Top Hill, Elizabeth, contacted Barry VK5ZMW/P at Kulpara, South Hummocks—distance 61 miles. Signal strength at VK5CU 5 x 9, and at VK5ZMW 5 x 5. VK5CU on 10040 MHz. and VK5ZMW on 10010 MHz. I am indebted to Barry for the following report:

"The weather was overcast with an extreme haze which made visibility poor, in fact the location could not be seen. Wind and rain was the forecast, and tossing the coin was the deciding factor whether to go or not. A 2 mx link was used as a back-up with a 4 el. yagi, which proved invaluable for determining the correct direction for 10 GHz. Des VK-5CU first located himself at a hill above Salisbury but no 3 cm. contact was made so a new location was decided, this being Black Top Hill.

"After about 30 minutes and no contact being made, we decided to review the situation. The 2 mx yagi d.f'ed Des through the centre of Port Wakefield, which was then visible from Kulpara. Les' antenna should therefore be pointing through Port Wakefield, and a check indicated Les' antenna to be too far north. A re-alignment of his antenna and contact was made. The parabolas did not seem to be too critical in direction, some 5 degrees swing could be made with very little change in signal.

"The equipment consisted of all solid state gear except the klystron. VK5CU used a separate transmit and receive dish, and VK-5ZMW one single dish. Power output from the transmitters about 100 mW. This contact was made after some 20 years of building, trying, modifying, trying, etc., made Des VK5CU a v.h.f. (Very Happy Fellow!)."

Congratulations to both of you, this distance will set a target for someone else to better. It will certainly be an Australian record and may not have been bettered by many anywhere.

GENERAL

From Bob VK3AOT comes an item or two, mentioning that on 27/12/71 Peter VK3BFG heard Phil VK0PF at 419 on 6 mx and they are keeping skeds on 20 mx each night to keep their interest doing. On 28/12 short skip was evident and allowed some operators their first contacts from VK3 to VK1 by working Eddie VK1VP. Eddie also worked VK7ZIS by short skip. On the same day, VK3ZTK worked VK9ZAP. On 432 MHz., Ron VK3AKC has worked VK7LZ a distance of 270 miles. Bob also advises that the VK4 beacon VK4VV is temporarily off the air due to an impending call sign change, a new electronic keyer will then be used. He also reports Kerry VK5SU at Ceduna, on 30/12, had heard VK6VE, the 2 mx beacon near Albany at S8, and on 31/12 at S4, while VK5VF had been S5. No contacts had been made.

John VK7JV writes to advise Col VK7KW left for Casey in the Antarctica in January and has the call VK0JV, and John VK7JV will be his QSL manager. Col has, or has access to, equipment to work the Australis 144-432 MHz. and the AMSAT 144-28 MHz. translators.

The VK5 Field Day (5/12/71) proved a great success. The band opened to VK6 for an hour or more and up to 16 stations were worked from there on 52 MHz. Few contacts also to VK2 and VK4.

So, generally speaking and looking back over the past month, the v.h.f. operator has really had a ball and with gradual improvement in equipment, distances covered must inevitably increase no matter what the frequency. I conclude this month not really with a thought for the month as more particularly a short joke taken from the pages of the W.A. V.h.f. Group News Bulletin, and which appealed to me: "Speaking of gifts, did you hear about the character who gave his ma-in-law a Jaguar for Christmas? Both he and the animal were well satisfied."

Finally, it appears the deadline for copy for "A.R." has been altered. My notes now need to be in Melbourne by the 3rd of the month, so it will be necessary to ask correspondents to have their information in my hands by 28th of each month. Your help in this direction will be much appreciated. 73, Eric VK5LP, The Voice in the Hills.

Stop Press.—The I.P.S.D., supported by the W.I.A., has received P.M.G. approval for one year from Feb. 1 to establish two keyed radio beacons to conduct radio propagation experiments between Antarctica and Australia. The mode is 2A2 at 200w. final input and the call signs, frequencies and locations are:

VK0GR—53.10 MHz., Casey.
VK0MA—53.20 MHz., Mawson.

VK0ZVS Macquarie Island has started transmitting on the 6 mx band -52.1 MHz.—and will be on between 7 and 9 p.m. Melbourne time. Is looking for contacts.

During the VK2 Field Day on 2/1/72 Doug VK2ZZI/P on Mt. Bindo worked ZL2TGT, ZL2TLY and ZL3AR/2 on 2 mx, probably via Es. VK2ZZI was using a.m. on 144.21 MHz. Peter VK2TK/2 worked two ZL stations. On 3/1/72 Bob VK5ZDX in Adelaide had a scratchy contact with Aubrey VK6XY at Albany, a distance of almost 1200 miles on 144.21 MHz. a.m. Kerry VK5SU at Ceduna worked Bob VK6ZFY/6 who was portable near Mt. Barker, and VK6XY. These contacts are believed to have been via a trapo mode. With three stations now active in Albany on 2 mx, no doubt many more trancontinental contacts will be achieved over the next couple of months.

NEW CALL SIGNS

OCTOBER 1971

VK3GZ—G. J. Zimmer, 1/15 Clendon Rd., Armadale, 3143.
VK3JK—C. W. Gliddon, 9 Gloria Ave., Dandenong, 3175.
VK3MA—D. L. Bradford, 2 Ralund Rd., Doncaster, 3108.
VK3YH—A. A. Varley, 65 Lasiandra Ave., Forest Hill, 3131.
VK3ADB—B. B. Hocking, 45 Wallace St., Morwell, 3840.
VK3AFM—F. M. Wrobel, 38 Hilton St., Glenroy, 3046.
VK3AFX—O. R. Hosking, 62 Thomas St., East Brighton, 3187.
VK3AMQ—M. G. White, 62 Peter St., Box Hill North, 3129.
VK3ASM—K. Moore, Lot 17, Mast Gully Rd., Upwey, 3158.
VK3ATE—Footscray Institute of Technology Radio Club, Ballarat Rd., Footscray, 3011.
VK3AUU—D. D. Tanner, Lye & Dixons Rd., Ripplebrook, 3818.
VK3AZG—I. B. Williamson, 62 French St., Lalor, 3075.
VK3AZT—J. B. Payne, 97 Ringwood St., Ringwood, 3134.
VK3BFW—W. F. Colborne, 80 Hill Rd., North Balwyn, 3104.
VK3BGC—R. G. Clay, 13 Brown St., Traralgon, 3844.
VK3ZGS—K. G. Slade, 23 Russell St., Greensborough, 3088.
VK3ZGY—W. J. Kirkhope, 271 High St., Lower Templestowe, 3107.
VK3ZJP—J. C. Parker, 7 Wellington St., Middle Brighton, 3186.
VK3ZWF—W. A. White, 1861 Dandenong Rd., North Clayton, 3168.
VK3ZWP—C. J. Gamble, Lot 19, Rosemar Circuit, East Rosanna, 3084.
VK3ZYR—R. H. Young, 1 Bland Ave., Dandenong, 3175.
VK3ZZX—J. L. Watkins, 4 The Grove., South Camberwell, 3124.
VK4LH—L. C. Kelso, 46 Gavegan St., North Bundaberg, 4670.
VK4ZA—R. C. Atkinson, 136 Marshal Lane, Kenmore, 4069.
VK4ZCL—G. J. Castledine, 10 Park Rd., Arana Hills, 4054.
VK4ZJV—R. J. Williams, 20 Nerang Coast Rd., Miami Keys, Broadbeach, 4217.
VK4ZWP—P. L. Williamson, 11 Harley St., Enoggera, 4051.
VK5JV—J. W. Williamson, 2/33 South Esplanade, Glenelg, 5045.
VK5NU—G. A. Dowse, C/o. Supt. Radio Branch, 30 Flinders St., Adelaide, 5000.
VK5UU—Z. P. Azary, C/o. Supt. Radio Branch, 30 Flinders St., Adelaide, 5000.
VK5UV—R. J. Cunningham, 59 Teusner Dr., Morphett Vale, 5162.
VK5VZ—C. G. Wilson, 50 Willcox Ave., Prospect, 5082.
VK5ZT—D. J. Brown, 17 Kentish Rd., Elizabeth Downs, 5113.
VK5ZBB/T—B. Boden, 12 Cungena Ave., Park Holme, 5043.
VK5ZPS—P. R. Smith, P.O. Box 49, Moana Beach, 5169.
VK6DQ—W. R. Woodley, 52 Marrawa Way, Maniana, 6107.
VK6EG—G. A. Warner, 82 Broadway, Bassendean, 6054.
VK6SO—J. Sollis, 33/59 Herdsman Pde., Wembley, 6104.
VK6ZCW—O. J. Willoughby, 48 View Tce., East Fremantle, 6158.
VK6ZGK—G. J. McDonald, Station: 36 Hope Cres., Lesmurdie, 6076; Postal: 1 Markham Way, Maidavale, 6057.
VK6ZHI—P. A. Bradshaw, 24 Riga Cres., Willetton, 6155.
VK6ZIW—A. D. Wallace, Station: 30 Sulman Rd., Wembley Downs, 6014; Postal: P.O. Box 23, Scarborough, 6019.
VK6ZJF—J. G. Farnell. Station: 41 Brighton Rd., Scarborough, 6019; Postal: P.O. Box 87, Scarborough, 6019.
VK7ZGS—G. A. Simpson, 217 Best St., Devonport, 7310.
VK8RM—R. W. Maginness, 56 Gregory St., Parap, 5790.
VK9AJ—R. Nimmo, C/o. S.I.L., P.O., Ukarumpa.
VK9EL—E. Seumahu, P.O. Box 793, Lae.
VK9GS—G. Sodencamp, P.O. Box 3155, Port Moresby.
VK9HT—Hitech Radio Club, P.O. Box 793, Lae.
VK9VG—G. W. van Galen, P.O. Box 723, Lae.
VK9XW—G. C. Woodford, Christmas Island, Indian Ocean.
VK0JV—C. S. Perger, Casey Base, Antarctica.

ALTERATIONS

VK3OQ—J. F. Dalstead, 14 Firth St., Doncaster, 3108.
VK3SJ—A. J. Simms, Forest Office, Gellibrand River, 3239.
VK3AKQ—K. J. Echberg, Lot 94, Thurloo Dr., Safety Beach, 3936.
VK3AVU—C. R. Lobb. Addition of initial R.
VK3AWF—W. J. Falconer, 30 Stanley Gr., Canterbury, 3126.
VK3AXR—C. G. Williams, Flat 6, Parton Crt., Glenhuntly, 3163.
VK3BDF—R. N. Field, 1242 Burke Rd., North Balwyn, 3104.
VK3WIA—Wireless Institute of Australia (Federal Executive), 10 Cannes Gr., Beaumaris, 3193.
VK3ZCQ—G. D. Johnson, 56 Holmes Rd., Moonee Ponds, 3039.
VK3ZCR—B. J. Alsop, "Tree Mist," One Tree Hill Rd., Ferny Creek, 3786.
VK3ZKL/T—A. Slamin. Addition of /T.
VK3ZPS—P. J. Armstrong, Church Rd., Yulecart, via Hamilton, 3300.
VK3ZRF—F. W. Banks, 901 Centre Rd., East Bentleigh, 3165.
VK3ZTA—D. J. Laidlaw, 4/24 Northam Ave., Higaton, 3216.
VK3ZWC—T. J. Conboy, 793 Ferntree Gully Rd., Wheelers Hill, 3170.
VK4HV—R. J. Thorn, 3 Madison St., Sunnybank, 4109.
VK4IS—A. L. Stehn, Station: Bli Bli Rd., Nambour, 4650; Postal: M.S. 1505, Nambour, 4650.
VK4KD—K. D. Ayers, 42 Thomas Dr., Chevron Island, Surfers Paradise, 4217.
VK4QQ—C. R. Rutson, 79 Park Rd., Yeronga, 4104.
VK4ZZG—G. D. Dixon, 9 Emily St., Deagon, 4107.
VK5RX—G. W. Luxon, 203 Belair Rd., Torrens Park, 5062.
VK5TA—R. A. Couzens, 20 Catalina Rd., Elizabeth, 5112.
VK5WI—Wireless Institute of Australia (S.A. Division), C/o. C. G. Luke, Loma Linda Gr., Wattle Park, 5066.
VK5WR—W. L. Russell, 33 Devonshire St., Walkerville, 5081.
VK5YA—J. M. Gluyas, 67 William St., South Plympton, 5038.
VK5ZQ—M. R. Burford, 261 Belair Rd., Torrens Park, 5062.
VK5ZKE/T—J. L. Jones, 70 Clayson Rd., Salisbury East, 5109.
VK5ZKP—K. J. Pearce, 25 First Ave., St. Peters, 5069.
VK6ZK—T. M. Stanicic, C/o. M.K.M.O. Camp 7, Roebourne, 6718; Postal: P.O. Box 350, Roebourne, 6718.
VK9MM—M. McBride (Fr.), C/o. Capuchin Mission, Tari, S.H.D.

CANCELLATIONS

VK3FS—A. J. O'Brien. Deceased.
VK3GJ—L. F. Schmidt. Transferred to Qld.
VK3ADB—D. L. Bradford. Now VK3MA.
VK3ALV—L. G. Watson. Not renewed.
VK3ALY/T—L. J. McKay. Not renewed.
VK3BBM—R. C. Marschke. Transferred to Qld.
VK3BEM—G. N. Marks. Transferred to Port Moresby.
VK3YBL—R. K. Peters. Transferred to N.S.W.
VK3YFD—F. M. Wrobel. Now VK3AFM.
VK3ZEM—Footscray Institute of Technology. Now VK3ATE.
VK3ZGA—T. D. Gregory. Transferred to Qld.
VK3ZHL—C. W. Gliddon. Now VK3JK.
VK3ZJW—R. J. Williams. Now VK4ZJV.
VK3ZNQ—K. Moore. Now VK3ASM.
VK3ZQL—J. A. Blanch. Not renewed.
VK3ZWP—B. B. Hocking. Now VK3ADB.
VK3ZZX—G. J. Zimmer. Now VK3GZ.
VK4DT—J. H. Ginsberg. Transferred Interstate.
VK4UL—L. P. Hubsher. Deceased.
VK4US—P. L. Hubsher. Deceased.
VK4ZLK—L. C. Kelso. Now VK4LH.
VK4ZRT—R. C. Atkinson. Now VK4ZA.
VK5AW—D. A. Carthew. Not renewed.
VK5IN—K. V. Hanson. Not renewed.
VK5TZ—J. B. Dennis. Transferred to N.S.W.
VK5XC—E. E. Leist. Not renewed.
VK5ZAT—C. A. Pay. Not renewed.
VK5ZCT—R. J. Cunningham. Now VK5UV.
VK5ZFR—N. F. Francis. Not renewed.
VK5ZGU—J. W. Coates. Not renewed.
VK6EJ—E. J. R. Cowles. Not renewed.
VK6MD—M. D. Scott. Left country.
VK6PA—K. C. Parker. Transferred to T.P.N.G.
VK6RW—R. J. Watson. Not renewed.
VK6WQ—W. M. F. Wattleworth. Not renewed.
VK6ZCZ—I. J. Hosie. Not renewed.
VK8DW—D. W. Stephens. Returned to U.S.A.
VK8SS—S. S. Stephens. Returned to U.S.A.
VK8ZRM—R. W. Maginness. Now VK8RM.
VK9EP—E. A. Parker. Not renewed.

BRIGHT STAR CRYSTALS

FOR ACCURACY, STABILITY, ACTIVITY AND OUTPUT

COMMERCIAL CRYSTALS

IN HC6U HOLDER, 0.005% TOLERANCE, FREQUENCY RANGE 6 TO 15 MHz.

$6.00 plus Sales Tax and Postage

WRITE FOR LIST OF OTHER TOLERANCES AND FREQUENCIES AVAILABLE

COMPREHENSIVE PRICE LIST NOW AVAILABLE

New Zealand Representatives: Messrs. Carrell & Carrell, Box 2102, Auckland
Contractors to Federal and State Government Departments

BRIGHT STAR CRYSTALS PTY. LTD.

LOT 6, EILEEN ROAD, CLAYTON, VIC., 3168 Phone 546-5076

With the co-operation of our overseas associates our crystal manufacturing methods are the latest

DIVISIONAL NOTES

NEW SOUTH WALES

NOMINATIONS FOR NEW COUNCIL, 1972

Article 6: "Nomination of a candidate for election to the Council must be received by the Secretary in writing not less than 21 days before the Annual General Meeting of the Institute, with an intimation in writing that such candidate is willing to act. Each nomination must be signed by two members proposing the candidate."

(A member means a member of the Institute in Grade A, that is, a Full Member of the Institute.)

Article 67: "The instrument appointing a proxy shall be in writing under the hand of the appointer and shall be deposited at the Registered Office of the Institute at least 24 hours before the time appointed for the Meeting at which the person named in such instrument proposed to vote in respect thereof."

The "Registered Office" of the N.S.W. Division is located at 14 Atchison Street, Crow's Nest, N.S.W., 2065, and NOT Box 1734, G.P.O., Sydney, N.S.W., 2001.

NOMINATION FORM—COUNCIL ELECTION MARCH 1972

We, the undersigned, being Full Members of the W.I.A., N.S.W. Division, do hereby nominate ..... for election as a Councillor of the N.S.W. Division for the year 1972/73.

Signed ..... (1) Usual Signature.
Signed ..... (2) Usual Signature.

I am willing to act as Councillor of the W.I.A., N.S.W. Division, if elected by members to do so.

(Signature)..... Date.....

This form **must** be received by the Secretary **not later** than **3rd March, 1972.**

FORM OF PROXY

Date .....

I, ... a member of the Institute, hereby appoint Mr. ..... also a member of the Institute to act for me as my proxy and in my name do all things which I myself being present would do at the meeting of the Institute to be held at ..... on .....

(Signature)..... Witness .....

ELECTION OF COUNCIL

Your earnest consideration is requested for this important occasion, the election of your official representatives on Council. Past years have shown a lack of interest, and it would be a note of confidence in the future if we had an active and virile election. This of course would provide an active and virile Council. Let 1972 be a year to remember.

VK2 DIVISION

Mar. 3: Closing date, nominations for the Council.
Mar. 24: Friday, Annual General Meeting, 7.45 p.m. at 14 Atchison St., Crows Nest.
Mar. 25: Saturday, Dinner at Artarmon Bowling Club, $5 per double.
Mar. 26: Sunday, Convention/Field Day.

VK2 DIVISION, W.I.A.

ANNUAL DINNER

to be held at

ARTARMON BOWLING CLUB

Burra Road, Artarmon

on

SATURDAY, 25th MARCH, '72

at 7.30 for 8.00 p.m.

Tickets: $5.00 Double

are available from the Admin. Secretary.

Dress: Black tie.

The next monthly general meeting of the VK2 Division will be held on Friday, 25th February, 1972. The lecture is the annual lecture supplied by the V.h.f. and T.v. Group and the lecturer will be Mr. Jamieson Rowe, VK2ZLO, the Editor of Electronics Australia. Mr. Rowe will talk on Antenna Matching and Measurements, a topic which will appeal to all members no matter what their particular operating interests may be.

Country members interested in v.h.f. are reminded that the V.h.f. and T.v. Group has now been publishing for some time a newsletter of mainly technical content each month. The V.h.f. Newsletter may be collected from the Wireless Institute Centre, free of charge, or obtained by post by forwarding a 9 x 4 inch stamped addressed envelope to the Editor, V.h.f. & T.v. Group Newsletter, 14 Atchison Street, Crows Nest, N.S.W., 2065.

Intending Amateurs are advised that a new A.O.C.P. class starts this month at W.I.C. Details of this or the Correspondence Course may be obtained from Course Supervisor, C/o. 14 Atchison Street, Crows Nest, N.S.W., 2065.

South-West Zone.—There is to be a meeting at Lockhart at 2 p.m. on 27th Feb., to discuss the venue and arrangements for this year's S.W. Zone Convention to be held as usual over the holiday week-end in October. Should you have problems finding your way, Ch. B will be monitored. Further details from Phil VK2YS.

SUPPORT OUR ADVERTISERS!

Support yourself also by saying you saw it in "Amateur Radio"

VICTORIA

The major event in February is the John Moyle Memorial Field Day on 12th and 13th February. Many stations will be in the field in this event. Both individual portable stations and those set up by clubs will be competing. Most Zones and clubs intend operating and the Victorian Divisional Council will field VK3AWI portable at Point Nepean.

The field day is an excellent opportunity to work from National Parks and it is to be hoped that many stations do this so as to activate as many National Parks as possible. This is one way of generating some interest as many are looking for contacts for the National Parks Award.

Conventions are once more in the news, with the Eastern Zone planning one in early March and the V.h.f. Group organising an Easter Convention at Wandin East, in the heart of the beautiful berry country behind the Dandenongs.

The Eastern and Mountain District Radio Club will be operating their station VK3ER for the Lilydale Centenary Celebrations from the 12th to 19th Feb. Visitors are welcome and special QSL cards will be issued.

New A.O.C.P. classes commence on 15th Feb. (theory) and 17th Feb. (Morse) and I would like on behalf of Council to wish success to all those attending.

Finally I would like to remind v.h.f. operators that the Ionospheric Prediction Service would like to have details of DX contacts, particularly those made to VK0 and also transequatorially. More details may be obtained from the Ionospheric Prediction Service at 162-166 Goulburn St., Darlinghurst, N.S.W., 2010.

Congratulations to Arthur Lock, VK3AUL, of Wodonga, on being awarded the British Empire Medal in the New Year's Honours List for services to the community.

The Eastern Zone publicity officer, George VK3ASV/T, reports that their Intruder Watch Group have been very active; that Norm VK3ZQC of Yallourn has been given permission to test and operate an experimental 2 mx beacon (144.925 MHz. initially, horizontal halo aerial); that the Latrobe Valley repeater VK3WI/R3 has been moved to Mt. Tassie, and the Zone welcomes many new operators recently successful in the exam.

VK3 S.W.L. GROUP

As from February 1972, the VK3 S.w.l. Group will hold only one meeting per month, on the **last Wednesday** in each month. This replaces the Friday meeting, and will commence on Wednesday, 23rd February, 1972.

Y.R.C.S. VICTORIA

The Council of the Youth Radio Club Scheme in Victoria is now under the Honorary Patronage of Major-General Sir Rohan Delacombe, K.C., M.G., K.C.V.O., K.B.E., C.B., D.S.O., K.St.J., and Lady Delacombe, C.St.J.

The following persons constitute the Victorian Divisional Council of the Scheme: Kenneth J. McLachlan, VK3ZDK, Supervisor; Dorothy E. McLachlan, Secretary; Keith A. Nicholls, VK3ANI, Treasurer; Jim Linton, Media Publicity Officer; Bob J. Callender, VK3AQ, Projects Officer; Chris Van-Lint, Education Officer.

The I.R.E.E. Pennant for the best School Club in Victoria was presented on 13/12/71 at the Assembly Hall of St. John's College, Braybrook, to their Radio Club which comprises eighty members. This is the first time the Pennant has been awarded in Victoria. Many certificates of different levels—mainly in the Honours range—were also distributed to the students.

Many new clubs are being formed for 1972 and anyone requiring further details should write to the State Supervisor, Y.R.C.S., P.O. Box 39, Mooroolbark, Vic., 3138.

— • • • —

RECIPROCAL LICENSING—BELGIUM

"World Radio" of Sept. 9, 1971, reports that since 1964 Belgium has made the unilateral gesture of granting licences to all, irrespective of officially-negotiated reciprocal facilities. Information about visitors' licences is stated to be obtainable from Rene Vanmuysen, ON4VY, Diepestreet 52, 1970, Wezembeek-Oppem, Belgium.

EASTERN ZONE, VIC. DIV., W.I.A.

ANNUAL CONVENTION

on

18th and 19th MARCH, 1972

at MOONDARRA G.E.T.H.

Bring your YL or XYL to win some of the prizes

Bookings and more details from E.Z. Sec., P.O. Box 175, Maffra, Vic., 3860.

CENTRAL COAST AMATEUR RADIO CLUB

will hold their **15th Annual**

FIELD DAY

at

GOSFORD, N.S.W.

on

SUNDAY, 20th FEB., 1972

PROGRAMME

9-9.30—Mobile Scramble, in six sections: H.f., 6 mx net, 6 mx tunable, 2 mx net, 2 mx tunable, u.h.f. Log extract to announcing table before 11 a.m.
8.45-10.30—Registration OM $2, XYL or YL $1, children or full-time students 50c.
9.30-10.00—Morning Tea provided.
10.00—Disposals opens.
10.00-10.45—40 mx Fox Hunt.
10.15-10.30—2 mx Pedestrian Fox Hunt (for people without 40 mx only!).
10.15-10.45—Ladies' Throwing Contest in 2 divisions: Rolling Pins, Radio.
11.15-12.00—2 mx Fox Hunt.
11.15-11.45—Ladies' Hat Making Contest (materials supplied).
12.00-1.30—Lunch provided.
1.30—Quiz closing time.
1.30-1.45—2 mx Pedestrian Fox Hunt.
1.30-4.00—Visit to Reptile Park or bus tour of area.
2.00-2.45—2 mx Fox Hunt.
2.45-3.15—Afternoon Tea provided.
3.10-3.40—6 and 2 mx Net combined Map Talk-in (52.525 and Ch. B).
4.00-4.15—2 mx Pedestrian Fox Hunt.
4.15-4.30—Lucky Dips.
4.30-5.00—Prizes.

Other attractions: Local Jam and Cake Stall, 807s, soft drinks, lucky door prize, quizzes, trade displays, disposals (must be in before 9.45 a.m.), children's events, Amateur Television, weaving display and demonstration.

14th JAMBOREE ON THE AIR

In his report, the national organiser, Hon. Commissioner Noel I. Lynch, 15 Noeline St., Dorrington, Qld., 4060 (SWL L40034), covers JOTA held on Oct. 16/17 last year. The use of Liaison Scouters and Link Camps in conjunction with JOTA are proving popular and worthwhile. Local work by W.I.A. and Amateurs receives praise, especially in N.S.W. and T.P.N.G. On the national level the blessing of JOTA by the Radio Branch receives special mention and appreciation. The use of local time instead of Z was much favoured.

There was a small decrease in the number of participating Amateur stations partially offset by multi-operator stations on a shift basis. Contacts were up and all helpers and hospitalities were acknowledged.

The next JOTA is Oct. 21/22, 1972. Good luck.

VHF COMMUNICATIONS

This is a publication in English for the Radio Amateur especially covering v.h.f., u.h.f. and microwaves.

"VHF Communications" offers:

★ Technical articles.
★ No editorials.
★ Long persistence material.
★ Components service. (Note, this is under active consideration.)
★ State-of-the-art technology.

"VHF Communications" is a West German quarterly publication issued in Feb., May, Aug. and Nov., is available on subscription of

$3.75 (surface mail) or
$5.95 (air mail)

from:

FEDERAL EX. PUBLICATIONS
Box 67, East Melb., Vic., 3002

Back issues for the years 1969, 1970 or 1971 are also normally in stock at $4.20 per set (four issues in each year) or $1.10 per single copy.

IF YOU ARE STILL A "HOME-BREW" AMATEUR SEE US FOR YOUR COMPONENTS!

- Air-Wound Inductances.
- G8KW Antenna Loading Inductances.
- Glazed Ceramic Strain Insulators.
- Transistors, ICs,. Diodes, etc., (subject to availability).
- Condensers—Fixed and Variable.
- Transformers—Power and Audio.
- Chokes—R.F. and Filter.
- Valves—Receiving and Transmitting.
- Microphones and Microphone Transfmrs.
- Cables—Audio and R.F. (Co-axial and Flat Line).
- Speakers—Communication and Hi-Fi.
- Audio—Modulation, Inter-Com., Hi-Fi.
- Resistors, Potentiometers — Wire Wound and Carbon.

Ring, Write or Call

WILLIAM WILLIS & CO. PTY. LTD.
77 CANTERBURY ROAD, CANTERBURY, 3126
Phone 836-0707

SILENT KEYS

It is with deep regret that we record the passing of:—

VK3NJ—K. Meallin.
VK3ARX—C. Serle.
L30150—A. G. McKrell.

6 METRE AMATEUR BAND

A rumour has recently been circulating amongst some v.h.f. operators that it is proposed to impose transmitting restrictions in the six metre Amateur band within a specified radius of Channel 0 t.v. transmitters.

All Amateurs are advised that the Central Office of the Radio Branch of the P.M.G. Department has made no such proposal, does not intend to make such a proposal, and is aware of no such proposal.

There is therefore no basis for the rumour.

—Michael Owen, VK3KI, Fed. Pres., W.I.A.

BOOK REVIEW

ELECTRONIC CONSTRUCTION PRACTICES

A very informative book, not only for the beginner in construction of electronic equipment, but also for the experienced builder.

The easy-to-read chapters, complete with very clear diagrams and photographs, cover the selection, use and mis-use of tools; equipment planning and layout; metal working including partitions, shielding and some novel methods; finishing by etching, painting, lettering; the correct mounting of components; and wiring and testing the completed unit.

The one shortcoming of this book is that it does not include any reference to construction of transistorised equipment.

Author: Robert Lewis, W8MQY; Publisher: Radio Publications Inc.; availability: Divisional Secretaries or Federal Executive Publications.

VHF PROPAGATION

Ionospheric Prediction Service Division,
Commonwealth Bureau of Meteorology,
162-166 Goulburn Street,
Darlinghurst, N.S.W., 2010.

Editor "A.R.," Dear Sir,

The Ionospheric Prediction Service has expanded its interests in v.h.f. propagation and we are now interested in receiving reports from Amateurs and SWLs on transequatorial propagation, Sporadic-E, and tropospheric propagation in the v.h.f.-u.h.f. spectrum.

To assist interested individuals we have standard report forms and a letter of explanation which can be supplied on application to me at the above address.

Log extracts from the past as well as future observations are welcome.

We value the efforts that Amateurs have made in the past to assist research into propagation and would appreciate any assistance in our current research.

A great deal of enthusiasm has been displayed by N.S.W. and some Interstate Amateurs with our current propagation research and we are anxious to foster this on a national scale. I would be grateful if you could give publicity on our project in "Amateur Radio" magazine at your earliest opportunity.

Next March, I.P.S. should have a short-term warning service operational for transequatorial propagation events. I hope to be able to give more details shortly.

—Roger Harrison, VK2ZTB, ex-VK3ZRY
Senior Technical Officer
Low Latitude Section.

[Those interested in this field are requested to write direct to Mr. Roger Harrison.—Ed.]

REPAIRS TO RECEIVERS, TRANSMITTERS

Constructing and testing: xtal conv., any frequency; Q5-ers, R9-ers, and transistorised equipment.

ECCLESTON ELECTRONICS

146a Cotham Rd., Kew, Vic. Ph. 80-3777

HAMADS

Four lines FREE for members only.

See Jan. 1972 "A.R." page 23 for complete details.

FOR SALE

Frankston, Vic.: HRO-60. The finest communications receiver of the HRO series. S.s.b./a.m./c.w., gen. cov. 1.7 to 30 MHz., plus bandspread all Ham bands Including 10-in. loudspeaker and built-in 110/230v. a.c. p.s. Perfect condition. Cost $1250, gift $495. VK3TD. Phone 783-9611 or 787-1407 (a.h.).

Cowell, S.A.: All-band 8236 linear, genuine 400w. output without flat-topping. Professional appearance with p.s.u., passive grid needs little drive. $100. VK5BI QTHR: Cowell Phone 62.

Townsville, Qld.: Vidicon Camera, fully transistorised with F1.9 25 cm. Dalmyer J.V. Lens, new E.M.I. 1-inch Vidicon, printed circuitry and full circuit diagrams, $175. W. Sebbens, P.O. Box 1105, Townsville, Qld.

Perth, W.A.: Two Heath Bandpass Filters, 8.4 to 8.9 MHz., $10 pr. VK6TU, QTHR.

Turramurra, N.S.W.: "Frontier" Digital 500 Transceiver. Fully solid state except driver and final. 500w. p.e.p., Nixie readout to 1 kHz., vox, p.t.t., 32 integrated circuits, 20 transistors, covers all bands 500 kHz. plus 28-30 plus 2 spare channels. Commercial p.s.u. with in-built speaker, brand new (original cost $715 plus $92 for p.s.u.). My price $650, will swap for FT101. VK2TQ, T. T. Tatham, 38A Holmes St., Turramurra, N.S.W., 2074. Phone 02-449-3274.

Bulleen, Vic.: Galvanised steel lattice tower, telescopic crank-up to 42 feet, in good condition, ready to transport. Phone VK3VG, 850-1894.

Canberra, A.C.T.: Hallicrafters SR150 Transceiver, 80-10 metres, 150w. p.e.p. s.s.b., crystal calibrator, mains p.s.u., handbook, elect. A1, external fair, $350. VK1VB, Vic. Burman, 140 Badimara St., Waramanga, A.C.T., Phone Canberra 88-2103.

Frankston, Vic.: HRO Senior Communications Receiver, c/w coils or 1.7 to 30 MHz., loudspeaker and components or p.s., $120. Baluns 10 to 80 mx, Heath type B-1, new, $10 each. VK3TD, Phone 783-9611 or 787-1407 (a.h.).

Townsville, Qld.: Variac, brand new, variable Transformer, 2 amp. 240 volt input, 0-280 volt output. Model W5MT. Bargain at $40. Write L. Dancey, VK4LY, QTHR.

Cowell, S.A.: Filter s.s.b. tx 4-band, works well. $50. Heavy duty p.s.u. to match $30. AR7 convert-for modern tubes and prod. det. with h.d. p.s.u. and 15-20 mx converter $50. VK5BI QTHR (Ph. 62).

Kempsey, N.S.W.: "Centralab" 20A 160-10 mx s.s.b. Exciter, $60. "Acitron" Mobile P.S., $80. Type "S" P.S., $25. "Command" 6-9 MHz. Rcvr., $10. VK2AHH, Box 137, Kempsey, N.S.W., 2440.

Frankston, Vic.: Power Supply, h.d. com. unit, 12v. d.c. input, 800v. 250 mA., 300v. and —125v. output, $75. Power Supply, Heath Model HP-10, 12v. d.c. input, 600v. 200 mA., 300v. and —125v. output, new, $55. VK3TD, Phone 783-9611 or 787-1407 (a.h.).

Mt. Waverley, Vic.: HRO Comm. Rx, original condition, all coils, p.s.u., match. speaker, handbook, $60. SCR522, unmodified, complete original condition, $25. Heavy duty a.c. p.s.u. or same, $15. VK3ZXX, QTHR (Ph. 03-277-9172).

WANTED

Boisdale, Vic.: Three-band Transceiver, Galaxy III, Swan, etc. Price and details to VK3BAO, QTHR (Phone 454364). Cash sale.

Miranda, N.S.W.: Converter, 27 or 28 MHz., output 7 to 9 MHz. VK2TN, I. Bailue, P.O. Box 169, Miranda, N.S.W., 2228. Phone (02) 520-8165.

Sandringham, Vic.: Disposal Crystal(s) for 1825 MHz. and any other freq. on 160 mx. Write with price and freq. VK3SL QTHR.

SUPPORT OUR ADVERTISERS!

Support yourself also by saying you saw it in "Amateur Radio"

R. L. DRAKE COMMUNICATIONS EQUIPMENT

NOW AVAILABLE EX STOCK SYDNEY

We have the following available ex stock or on short delivery time:

★ SPR-4	SOLID STATE COMMUNICATIONS RECEIVER	$520.00
★ R-4B	RECEIVER SSB-AM-CW-RTTY	$615.00
★ 2-C	RECEIVER SSB-AM-CW-RTTY	$342.00
★ SW-4A	RECEIVER INTERNATIONAL SHORT WAVE	$390.00
★ T-4XB	TRANSMITTER SSB	$650.00
★ W-4	RF IN-LINE WATTMETER 1.8-54 MHZ.	$65.00
★ WV-4	RF IN-LINE WATTMETER 20-200 MHZ.	$77.00

All prices plus Sales Tax.

ELMEASCO INSTRUMENTS PTY. LTD.

7 CHARD ROAD, BROOKVALE, N.S.W., 2100

Telephone: SYDNEY 93-7944; MELBOURNE 26-1552

AMATEUR ANTENNAS

Superior Quality

All Imported

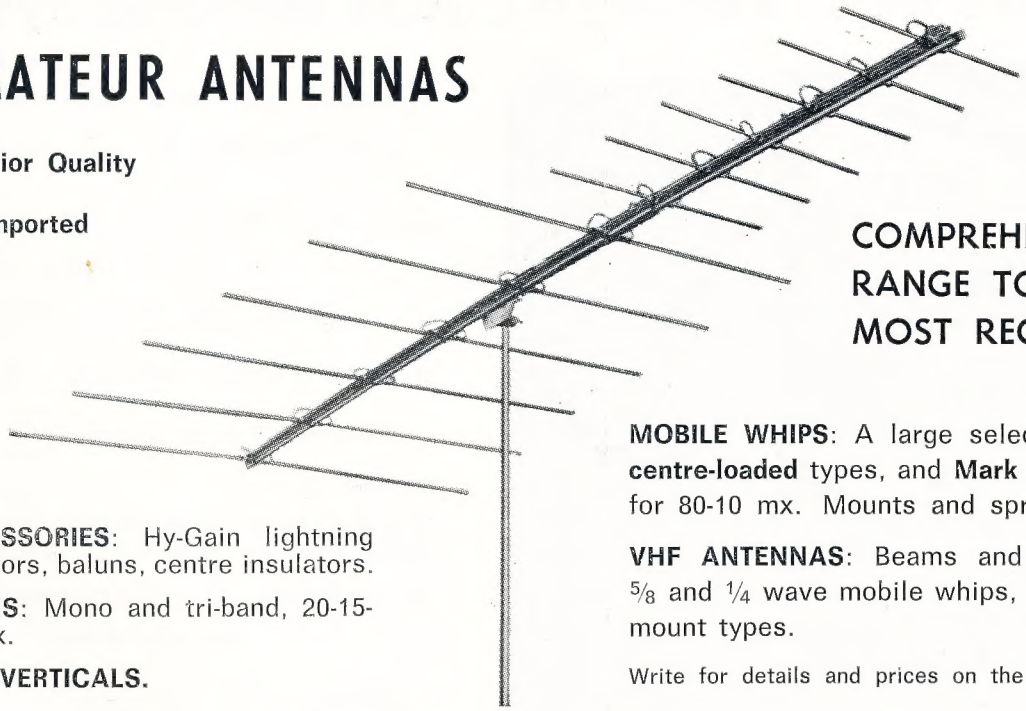

COMPREHENSIVE RANGE TO SUIT MOST REQUIREMENTS

MOBILE WHIPS: A large selection of **Hy-Gain centre-loaded** types, and **Mark Mobile Helicals,** for 80-10 mx. Mounts and springs, etc.

VHF ANTENNAS: Beams and ground planes, 5/8 and 1/4 wave mobile whips, including gutter-mount types.

Write for details and prices on the types you require.

ACCESSORIES: Hy-Gain lightning arrestors, baluns, centre insulators.

BEAMS: Mono and tri-band, 20-15-10 mx.

TRAP-VERTICALS.

BAIL ELECTRONIC SERVICES

60 Shannon St., Box Hill North, Vic., 3129. Ph. 89-2213

N.S.W. Rep.: **STEPHEN KUHL, P.O. Box 56, Mascot, N.S.W., 2020.** Telephone: Day 67-1650 (AH 371-5445)
South Aust. Rep.: **FARMERS RADIO PTY. LTD., 257 Angas St., Adelaide, S.A., 5000.** Telephone 23-1268
Western Aust. Rep.: **H. R. PRIDE, 26 Lockhart Street, Como, W.A., 6152.** Telephone 60-4379

BAIL ELECTRONIC SERVICES

for your Amateur Station requirements

YAESU SSB Transmitters, Receivers, Transceivers, and Linears
HY-GAIN HF and VHF Antennas, Beams, and Mobile Whips

NEW YAESU EQUIPMENT — Factory Export Models only

- ★ **FT-200 Transceiver, latest model, with provision for use of an external VFO.**
- ★ **FTDX-401 Transceiver, 560w. input, new version of FTDX-400/560, with noise blanker, fan, CW filter.**
- ★ **FT-101, latest transistorised Transceiver, with factory installed mods.**
- ★ **FT-2F Transceiver, 144 MHz. solid state, 12 channels, FM, 10 watts.**
- ★ **YC-305 Digital Frequency Counter, 30 MHz. maximum, five digits, with switchable 8-digit capability.**

All sets pre-sale checked and covered by our 90-day warranty.

BEAM ROTATORS — CO-AX. SWITCHES — ELECTRONIC KEYERS, — PTT MICROPHONES — 24-HOUR DIGITAL CLOCKS
CO-AX. CABLE — SWR METERS — LOW-PASS FILTERS — HEATHKIT AMATEUR EQUIPMENT — CO-AX. PLUGS
YAESU VALVES and SPARES, etc.

BAIL ELECTRONIC SERVICES

60 SHANNON STREET, BOX HILL NORTH, VIC., 3129 Telephone 89-2213

N.S.W. Rep.: **STEPHEN KUHL, P.O. Box 56, Mascot, N.S.W., 2020.** Telephone: Day 67-1650 (AH 371-5445)
South Aust. Rep.: **FARMERS RADIO PTY. LTD., 257 Angas St., Adelaide, S.A., 5000.** Telephone 23-1268
Western Aust. Rep.: **H. R. PRIDE, 26 Lockhart Street, Como, W.A., 6152.** Telephone 60-4379

The World's Most Versatile Circuit Building System!

SIZES: 1/8" and 1/16" WIDTHS
LENGTH: 100 ft. roll, 5 ft. card

IDEAL FOR PROTOTYPE AND PRODUCTION CONSTRUCTION

USEFUL FOR WIRING REPAIRS

★ **NO DRILLING** ★ **FAST** ★ **NO MESS**

Available from all Leading Radio Houses

Marketed by—

ZEPHYR PRODUCTS PTY. LTD.

70 BATESFORD RD., CHADSTONE, VIC., 3148

Telephone 56-7231

ZEPHYR

MANUFACTURERS OF RADIO AND ELECTRICAL EQUIPMENT AND COMPONENTS

THE WIRELESS INSTITUTE OF AUSTRALIA

Insert - February A.R.

STATE OF VICTORIA POWER RESTRICTIONS

February A.R. is late every year because of holidays and, consequently, printery shut down. It is not much later this year than any other.

The outlook for March A.R. at this moment appears gloomy because the printing house for A.R. has been closed — due to power loadings. There is no immediate evidence of the general power restrictions being lifted. At best, therefore, March A.R. - the first to be published by the Federal organisation - may be late.

The situation is under constant review and numerous alternatives are in mind - most are impractical, some are feasible. Any economically-sound ideas which any member might care to make would be most welcome and would be closely examined having regard to changing circumstances as each day passes.

Every endeavour will, of course, be made to get March A.R. printed and distributed by the First of the month. Failing this, any delay will be minimised.

73

Peter B. Dodd.

P. B. Dodd
Federal Manager

Office of the Executive,
P.O. Box 67,
East Melbourne, Vic. 3002

9.2.1972

S T O P P R E S S: Items (in expanded form) for March included -

Oscar A-O-B has now been re-scheduled by AMSAT for 1973. A-O-C will be launched about June and will contain only the 2-metre / 10-metre U.S.A. transponder of the three systems originally planned for A-O-B.

Major "Bill" Mitchell, VK3UM, died of a heart attack on 2nd February. There were several other "silent keys" for March A.R.

Federal Convention is at Easter - MARCH 31ST - APRIL 3RD